**PRONAR Sp. z o.o.**

17-210 NAREW, UL. MICKIEWICZA 101A, WOJ. PODLASKIE

| | | |
|---|---|---|
| tel.: | +48 085 681 63 29 | +48 085 681 64 29 |
| | +48 085 681 63 81 | +48 085 681 63 82 |
| fax: | +48 085 681 63 83 | +48 085 682 71 10 |

***www.pronar.pl***

# OPERATOR'S MANUAL

## AGRICULTURAL TRAILER

# PRONAR RC2100

TRANSLATION OF THE ORIGINAL COPY OF THE MANUAL

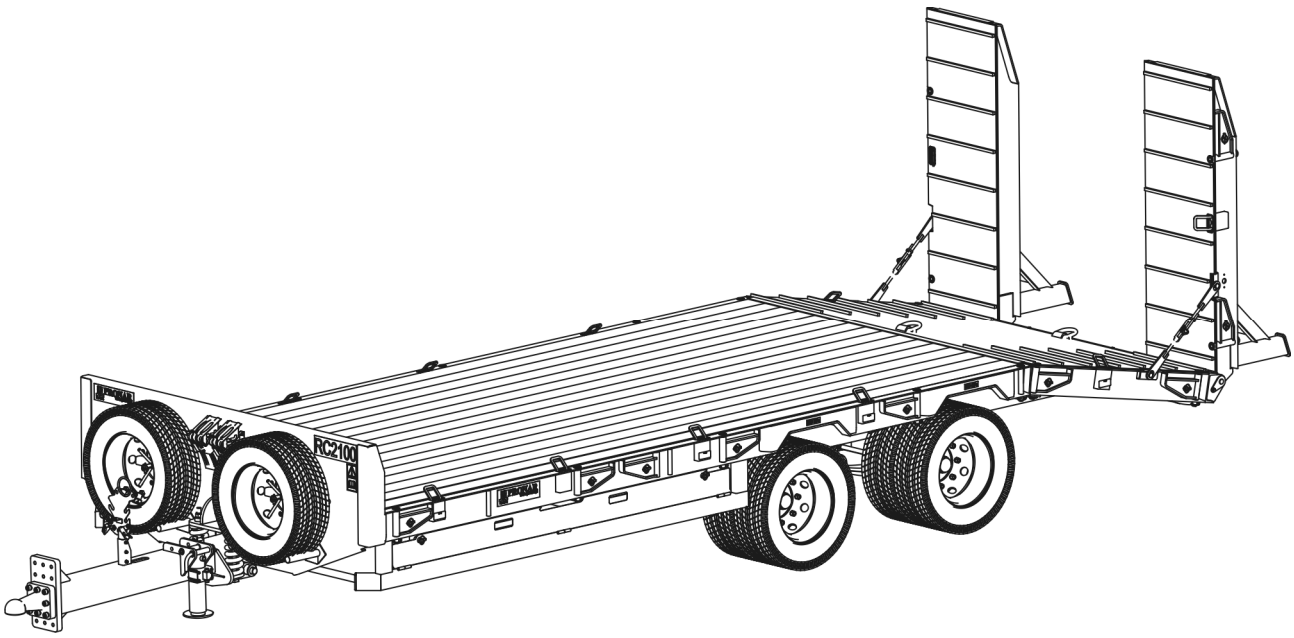


ISSUE 2A-09-2010

PUBLICATION NO 208N-00000000-UM

EN

# INTRODUCTION

Information contained herein is current at date of publication. As a result of improvements, some numerical values and illustrations contained in this publication may not correspond to the factual specification of the machine supplied to the user. The manufacturer reserves the right to introduce design changes in machines produced that facilitate operation and improve the quality of their work, without making minor amendments to this Operator's Manual.

This Operator's Manual is an integral part of the machine's documentation. Before using the machine, the user must carefully read this Operator's Manual and observe all recommendations. This guarantees safe operation and ensures malfunction free work of the machine. The machine is designed to meet obligatory standards, documents and legal regulations currently in force.

The manual describes the basic safety rules and operation of agricultural trailer Pronar RC2100.

If the information contained in the Operator's Manual needs clarification then the user should refer for assistance to the sale point where the machine was purchased or to the Manufacturer.

**MANUFACTURER'S ADDRESS:**

*PRONAR Sp. z o.o.*
*ul. Mickiewicza 101A*
*17-210 Narew*

**CONTACT TELEPHONES**

*+48 085 681 63 29* *+48 085 681 64 29*
*+48 085 681 63 81* *+48 085 681 63 82*

## SYMBOLS APPEARING IN THIS OPERATOR'S MANUAL

Information, descriptions of danger and precautions and also recommendations and prohibitions associated with user safety instructions are marked:

and also preceded by the word **"DANGER”.** Failure to observe the instructions may endanger the machine operator's or other person's health or life.

Particularly important information and instructions, the observance of which is essential, are distinguished in the text by the sign:

and also preceded by the word **"ATTENTION".** Failure to observe the instructions may lead to damage to the machine as a result of improper operation, adjustment or use.

In order to focus the user's attention on the need to perform maintenance, the relevant section of the Operator's Manual is marked with the pictogram:

Additional tips and advice for machine operation are marked:

and also preceded by the word **„TIP”**.

## DIRECTIONS USED IN THIS OPERATOR'S MANUAL

Left side – side to the left hand of the operator facing in the direction of machine's forward travel.
Right side – side to the right hand of the operator facing in the direction of machine's forward travel.

## REQUIRED SERVICE ACTIONS

Service actions described in the manual are marked: ➡

Result of service/adjustment actions or comments concerning the performance of actions are marked: ⇨

PRONAR

**PRONAR Sp. z o.o.**
ul. Mickiewicza 101 A
17-210 Narew, Polska
tel./fax (+48 85) 681 63 29, 681 63 81, 681 63 82, 681 63 84, 681 64 29
fax (+48 85) 681 63 83
http://www.pronar.pl
e-mail: pronar@pronar.pl

# EC DECLARATION OF CONFORMITY OF THE MACHINERY

PRONAR Sp. z o.o. declares with full responsibility, that the machine:

| Description and identification of the machinery | |
|---|---|
| Generic denomination and function: | **TRAILER** |
| Type: | **RC2100** |
| Model: | **- - - - -** |
| Serial number: | |
| Commercial name: | **TRAILER PRONAR RC2100** |

to which this declaration relates, fulfills all the relevant provisions of the Directive **2006/42/EC** of The European Parliament and of The Council of 17 May 2006 on machinery, and amending Directive 95/16/EC (Official Journal of the EU, L 157/24 of 09.06.2006).

The person authorized to compile the technical file is the Head of Research and Development Department at PRONAR Sp. z o.o., 17-210 Narew, ul. Mickiewicza 101A, Poland.

This declaration relates exclusively to the machinery in the state in which it was placed on the market, and excludes components which are added and/or operations carried out subsequently by the final user.

Z-CA DYREKTORA
d/s technicznych
członek zarządu
Roman Omelianiuk

Narew, the _____

*Place and date*

*Full name of the empowered person position, signature*

# TABLE OF CONTENTS


1 BASIC INFORMATION 1.1

1.1 IDENTIFICATION 1.2

1.1.1 TRAILER IDENTIFICATION 1.2

1.1.2 AXLE IDENTIFICATION 1.3

1.1.3 LIST OF FACTORY NUMBERS 1.4

1.2 PROPER USE 1.4

1.3 OPTIONAL EQUIPMENT 1.7

1.4 WARRANTY TERMS 1.8

1.5 TRANSPORT 1.9

1.5.1 TRANSPORT ON VEHICLE. 1.10

1.5.2 INDEPENDENT TRANSPORT BY THE USER. 1.12

1.6 ENVIRONMENTAL HAZARDS 1.12

1.7 WITHDRAWAL FROM USE 1.13

2 SAFETY ADVICE 2.1

2.1 BASIC SAFETY RULES 2.2

2.1.1 USE OF TRAILER 2.2

2.1.2 HITCHING AND DISCONNECTING FROM TRACTOR 2.3

2.1.3 HYDRAULIC AND PNEUMATIC SYSTEMS 2.4

2.1.4 LOADING AND UNLOADING 2.4

2.1.5 TRANSPORTING THE MACHINE 2.6

2.1.6 TYRES 2.9

2.1.7 MAINTENANCE 2.10

2.2 DESCRIPTION OF MINIMAL RISK 2.12

2.3 INFORMATION AND WARNING DECALS 2.13

# 3 DESIGN AND OPERATION 3.1

3.1 TECHNICAL SPECIFICATION 3.2

3.2 TRAILER CONSTRUCTION 3.3

3.2.1 CHASSIS AND LOAD PLATFORM 3.3

3.2.2 DRAWBAR OF TRAILER 3.5

3.2.3 SUSPENSION 3.6

3.2.4 MAIN BRAKE 3.7

3.2.5 PARKING BRAKE 3.9

3.2.6 HYDRAULIC SYSTEM OF THE RAMPS 3.10

3.2.7 SUPPORT HYDRAULIC SYSTEM 3.12

3.2.8 LIGHTING SYSTEM 3.13

3.2.9 HYDRAULIC WINCH 3.14

# 4 CORRECT USE 4.1

4.1 PREPARING FOR WORK BEFORE FIRST USE 4.2

4.1.1 CHECKING THE TRAILER AFTER DELIVERY 4.2

4.1.2 PREPARE A TRAILER FOR FIRST HITCHING TO TRACTOR 4.3

4.2 HITCHING AND DISCONNECTING FROM TRACTOR 4.4

4.3 TRAILER SUPPORT OPERATION 4.7

4.4 LOADING AND UNLOADING THE TRAILER 4.10

4.4.1 STANDARD SIZE LOADS 4.10

4.4.2 OVERSIZE LOADS 4.11

4.4.3 UNLOADING THE TRAILER 4.15

4.5 RAMPS' PROTECTIONS 4.15

4.5.1 RAMPS' INTERLOCK 4.15

4.5.2 SPRING CATCH 4.17

4.6 OPERATION OF HYDRAULIC WINCH 4.18

4.6.1 USE OF HYDRAULIC WINCH 4.18

4.6.2 GENERAL PRINCIPLES OF SAFE OPERATION OF THE WINCH 4.18

4.7 SECURING LOAD 4.19

4.8 TRANSPORTING THE MACHINE 4.21

4.9 PROPER USE AND MAINTENANCE OF TYRES 4.23

**5 MAINTENANCE 5.1**

5.1 PRELIMINARY INFORMATION 5.2

5.2 SERVICING BRAKES AND AXLES 5.2

5.2.1 PRELIMINARY INFORMATION 5.2

5.2.2 INITIAL INSPECTION OF AXLE BRAKES 5.3

5.2.3 CHECK WHEEL AXLE BEARINGS FOR LOOSENESS 5.4

5.2.4 ADJUSTMENT OF WHEEL AXLE BEARINGS LOOSENESS 5.6

5.2.5 MOUNTING AND DISMOUNTING WHEELS, INSPECTION OF WHEEL NUT TIGHTENING. 5.7

5.2.6 CHECK AIR PRESSURE, EVALUATE TECHNICAL CONDITION OF WHEELS AND TYRES, 5.10

5.2.7 ADJUSTMENT OF MECHANICAL BRAKES 5.11

5.2.8 CHANGE OF PARKING BRAKE CABLE AND ADJUSTMENT OF CABLE TENSION. 5.13

5.3 PNEUMATIC SYSTEM MAINTENANCE 5.16

5.3.1 PRELIMINARY INFORMATION 5.16

5.3.2 INSPECTING AND CHECKING AIR TIGHTNESS OF PNEUMATIC SYSTEM. 5.17

5.3.3 CLEANING THE AIR FILTERS 5.18

5.3.4 DRAINING WATER FROM AIR TANK 5.19

5.3.5 CLEANING DRAIN VALVE 5.20

5.3.6 CLEANING AND MAINTAINING PNEUMATIC LINE CONNECTIONS AND PNEUMATIC SOCKETS 5.21

5.3.7 REPLACEMENT OF THE PNEUMATIC LINE 5.22

5.4 HYDRAULIC SYSTEM MAINTENANCE 5.23

5.4.1 PRELIMINARY INFORMATION 5.23

5.4.2 CHECKING HYDRAULIC SYSTEM TIGHTNESS 5.24

5.4.3 CHECKING TECHNICAL CONDITION OF HYDRAULIC CONNECTIONS AND SOCKETS. 5.24
5.4.4 CHANGE OF HYDRAULIC LINES 5.25
5.5 ADJUSTMENT OF DRAWBAR EYE POSITION 5.25
5.6 OPERATION OF ELECTRICAL SYSTEM AND WARNING ELEMENTS 5.27
5.6.1 PRELIMINARY INFORMATION 5.27
5.6.2 CHANGE BULBS 5.28
5.7 TRAILER LUBRICATION 5.29
5.8 CONSUMABLES 5.33
5.8.1 HYDRAULIC OIL 5.33
5.8.2 LUBRICANTS 5.34
5.9 CLEANING TRAILER 5.35
5.10 STORAGE 5.37
5.11 TIGHTENING TORQUE FOR NUT AND BOLT CONNECTIONS 5.37
5.12 TROUBLESHOOTING 5.39

*SECTION*

# 1

# BASIC INFORMATION

# 1.1 IDENTIFICATION

## 1.1.1 TRAILER IDENTIFICATION

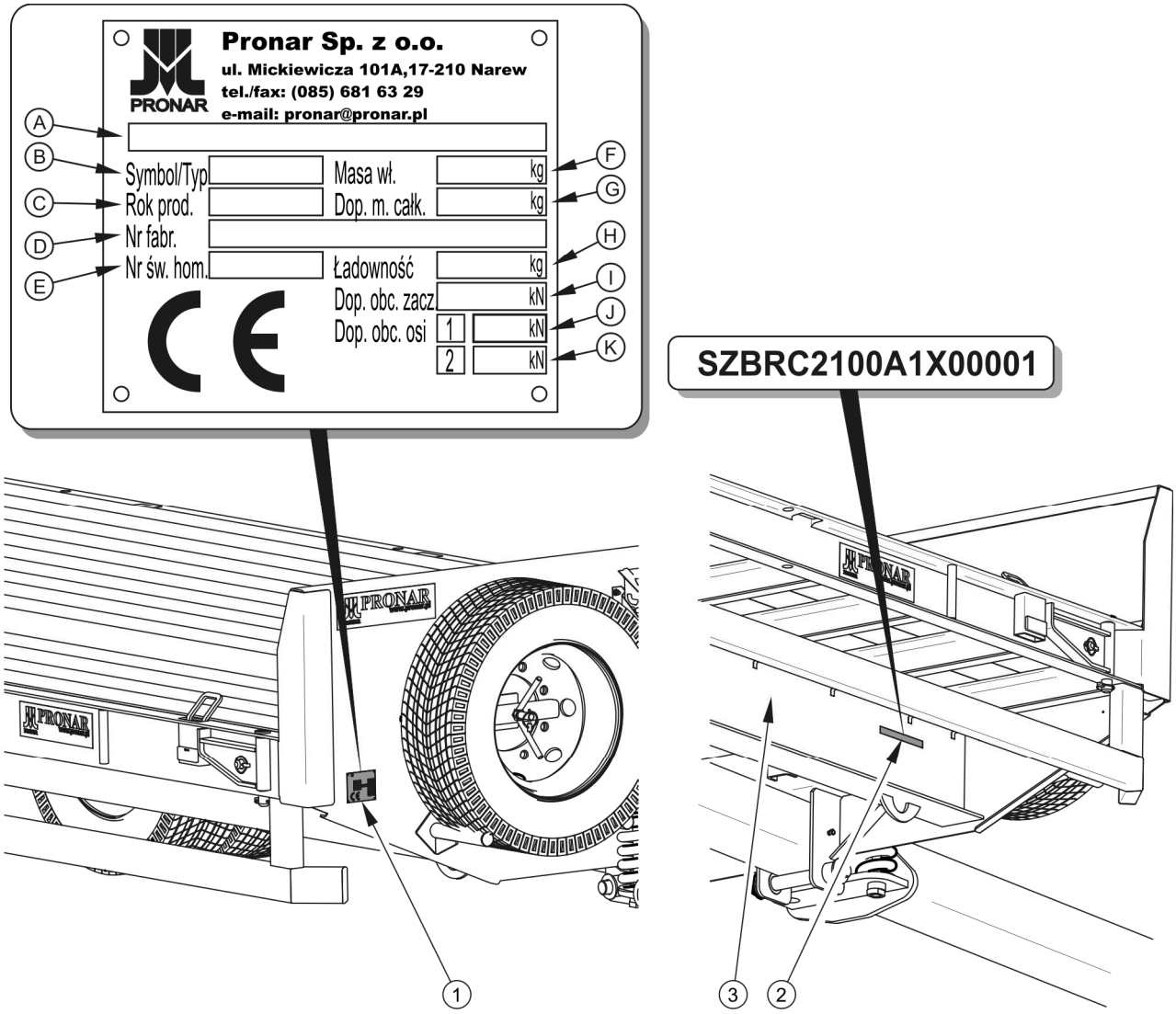


**FIG. 1.1 Location of the data plate and serial number**

*(1) data plate, (2) example of serial number, (3) right longitudinal member of lower frame*

The trailer is marked with data plate (1), located on the trailer's front wall and with serial number (2) located on a gold painted rectangle. The serial number is stamped on the right longitudinal member of the frame. When buying the trailer check that the serial numbers on the machine agree with the number written in the *WARRANTY BOOK*, in the sales documents and in the *OPERATOR'S MANUAL*.

**TAB. 1.1 Markings on data plate**

| ITEM | MARKING |
|---|---|
| **A** | General description and purpose |
| **B** | Symbol /Type |
| **C** | Year of manufacture |
| **D** | Seventeen digit serial number (VIN) |
| **E** | Official certificate number |
| **F** | Tare weight |
| **G** | Maximum gross weight |
| **H** | Carrying capacity |
| **I** | Permissible hitching system loading |
| **J** | Permissible front axle load |
| **K** | Permissible rear axle load |

## 1.1.2 AXLE IDENTIFICATION

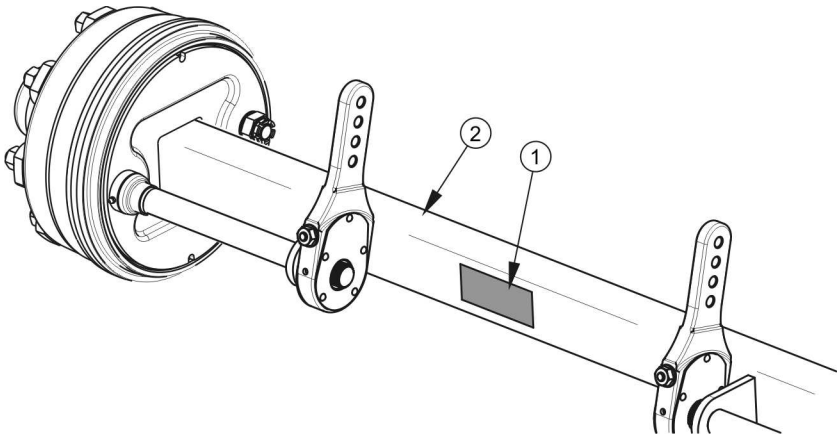


**FIG. 1.2 Location of the axle data plate**

*(1) data plate, (2) wheel axle,*

The factory number of the axle shaft and its type are stamped onto the data plate (2) secured to the axle shaft beam (1) – figure (*1.2*).

### 1.1.3 LIST OF FACTORY NUMBERS

**TIP**

**If spare parts have to be ordered or if problems occur, it is very often necessary to give the factory numbers of parts or the VIN number of the trailer. Therefore, it is recommended that these numbers are inscribed in the table (1.2).**

**TAB. 1.2 List of factory numbers**

| **VIN** | | | | | | | | | | | | | | | | |
|---|---|---|---|---|---|---|---|---|---|---|---|---|---|---|---|---|
| **S** | **Z** | **B** | **R** | **C** | **2** | **1** | **0** | **0** | | | **X** | | | | | |
| **FRONT AXLE FACTORY NUMBER** | | | | | | | | | | | | | | | | |
| | | | | | | | | | | | | | | | | |
| **REAR AXLE FACTORY NUMBER** | | | | | | | | | | | | | | | | |
| | | | | | | | | | | | | | | | | |

# 1.2 PROPER USE

The trailer is designed for transporting agricultural and construction machines and the loads which can be properly secured against moving during travel (loads placed in boxes, containers, on pallets etc.). Transporting people, animals, bulk and hazardous materials is forbidden and regarded as contrary to the intended purpose of the trailer. During the use of the machine comply with all road traffic regulations and transport regulations in force in the given country, and any breach of these regulations is regarded by the Manufacturer as use contrary to its intended purpose.

The trailer is constructed according to current safety requirements and engineering standards. The brake system and the light and indicator system meet the requirements of road traffic regulations. The maximum speed of the trailer on public roads is 30 km/h in Poland (pursuant to Road Traffic Act of June 20th 1997, article 20). In the countries where the trailer is used, the limits stipulated by the road traffic legislation in force in a given country must be observed. The trailer speed must not, however, be greater than the maximum design speed of 40 km/h.

## IMPORTANT!

**The trailer must not be used for purposes other than those for which it is intended. The user MUST NOT:**

- **transport people, animals, hazardous materials, chemically aggressive loads that will corrode the construction elements of the trailer (causing corrosion of steel, destruction of paint coat, dissolving plastic elements and destruction of rubber elements etc.),**
- **transport incorrectly secured load, which during travel may cause contamination of the road and natural environment,**
- **transport incorrectly secured load, which during travel may change its position on the load platform or fall out of the load platform,**
- **transport load whose centre of gravity may destabilise the trailer and threaten safety during travel,**
- **transport loads, which have uneven load distribution and/or overload axles and suspension elements.**

Using it as intended also involves all actions connected with the safe and proper operation and maintenance of the machine. In connection with this the user is obliged to:

- carefully read the *OPERATOR'S MANUAL* of the trailer, *WARRANTY BOOK* and comply with the recommendations contained in these documents,
- understand the trailer's operating principle and how to operate it safely and correctly,
- adhere to the established maintenance and adjustment plans,
- comply with general safety regulations while working,
- prevent accidents,
- comply with the road traffic regulations in force in a given country, in which the trailer is used,
- carefully read the Operator's Manual and comply with its recommendations,
- only hitch the trailer to an agricultural tractor which fulfils all the requirements specified by the trailer's Manufacturer.

The trailer may only be used by persons, who:

- are familiar with the contents of this publication and with the contents of the agricultural tractor Operator's Manual,
- have been trained in trailer operation and safe operation,
- have the required authorisation to drive and are familiar with the road traffic regulations and transport regulations.

**TAB. 1.3 Agricultural tractor's requirements**

| CONTENTS | UNIT | REQUIREMENTS |
|---|---|---|
| **Pneumatic brake system** | | |
| Pneumatic system 2 - line | - | sockets compliant with PN-ISO 1728:2007 |
| Nominal pressure of the system | bar | 8 |
| **Hydraulic brake system** | | |
| Hydraulic system | - | sockets compliant with ISO 7421-1 |
| Nominal pressure of the system | bar | 150 |
| **Hydraulic system** | | |
| Hydraulic oil | - | L HL 32 Lotos |
| Pressure rating of the system | MPa | 16 |
| Oil demand: | l | 14 |
| **Electrical system** | | |
| Electrical system voltage | V | 12 |
| Attachment socket | - | 7 polar compliant with ISO 1724 |
| **Tractor hitches** | | |
| Minimum lift capacity (vertical load) of the hitching system | kg | 3,000 |
| **Other requirements** | | |
| Minimum tractor power demand | kW(KM) | 74.6(104) |

## IMPORTANT!

**Use of other oil is permitted on condition that it may be mixed with the oil used in the trailer. Detailed information may be found on the product information card.**

# 1.3 OPTIONAL EQUIPMENT

**TAB. 1.4 Trailer optional equipment**

| EQUIPMENT | STANDARD | ADDITIONAL | OPTION |
|---|---|---|---|
| *OPERATOR'S MANUAL* | • | | |
| *WARRANTY BOOK* | • | | |
| 2-line pneumatic system with ALB regulator | • | | |
| 2-line pneumatic system with ALB Knorr Bremse regulator | | | • |
| Hydraulic system | | | • |
| Drawbar set with ball joint towing attachment ∅80 | • | | |
| Drawbar set with fixed eye ∅50 | | | • |
| Drawbar set with fixed eye ∅40 | | | • |
| Drawbar set with rotating drawbar eye ∅50 | | | • |
| Ramp folding mechanism | • | | |
| Hydraulic system for ramp folding | | | • |
| Wheel chocks | • | | |
| Slow-moving vehicle warning sign | | • | |
| Warning reflective triangle | | • | |
| Mudguards | | • | |
| Water tank | | • | |
| Side Barriers | • | | |
| Fixing lugs | • | | |
| Toolbox | | • | |

| EQUIPMENT | STANDARD | ADDITIONAL | OPTION |
|---|---|---|---|
| Spare wheel (1 or 2 pcs) | | • | |
| Floor extensions + plank holder | | • | |
| Connection lead for the electrical system | • | | |
| Hydraulic winch | | • | |
| Floor planks (coniferous wood planks) | • | | |
| Floor planks (oak wood planks) | | | • |

Information concerning tyres is provided at the end of this publication in *ANNEX A.*

# 1.4 WARRANTY TERMS

PRONAR Sp. z o.o., Narew guarantees the reliable operation of the machine when it is used according to its intended purpose as described in the *OPERATOR'S MANUAL*. The repair period is specified in the *WARRANTY BOOK*.

The guarantee does not apply to those parts and sub-assemblies of the machine, which are subject to wear in normal usage conditions, regardless of the warranty period. Consumables include the following parts/sub-assemblies:

- drawbar hitching eye,
- pneumatic system connector filters,
- tyres,
- brake shoes,
- bulbs and LED lamps,
- seals,
- bearings,
- floor planks.

The warranty service only applies to such cases as: mechanical damage, which is not the user's fault, factory defects of parts, etc.

In the event of damage arising from:

- mechanical damage which is the user's fault, caused by road accidents,
- by inappropriate use, adjustment or maintenance, use of the trailer for purposes other than those for which it is intended,
- use of damaged machine,
- repairs carried out by unauthorised persons, improperly carried out repairs,
- making unauthorised alterations to machine design,

the user will lose the right to warranty service.

**TIP**

**Demand that the seller carefully and precisely fills out the Warranty Book and guarantee repair coupons. A missing date of purchase or sale point stamp, may make the user ineligible for any warranty repair or refund.**

The user is obliged to report immediately on noticing any wear in the paint coating or traces of corrosion, and to have the faults rectified whether they are covered by the guarantee or not. Detailed guarantee regulations are contained in the *WARRANTY BOOK* attached to each machine.

Modification of the trailer without the written consent of the Manufacturer is forbidden. In particular, do NOT weld, drill holes in, cut or heat the main structural elements of the machine, which have a direct impact on the machine operation safety.

# 1.5 TRANSPORT

The trailer is ready for sale completely assembled and does not require packing. Packing is only required for the machine's technical documentation and any extra fittings. The trailer is delivered to the user either transported on a vehicle or, after being attached to a tractor, independently (trailer towed with a tractor).

### 1.5.1 TRANSPORT ON VEHICLE.

Loading and unloading of trailer from vehicle shall be conducted using loading ramp with the aid of an agricultural tractor. During work adhere to the general principles of Health and Safety at Work applicable to reloading work. Persons operating reloading equipment must have the qualifications required to operate these machines. The trailer must be properly connected with the tractor according to the requirements in this Operators Manual. The trailer brake system must be started in checked before driving off or onto ramp.

The trailer should be attached firmly to the platform of the vehicle using straps or chains fitted with a tightening mechanism. Securing elements should be attached to the transport catches designed for this purpose (1) Figure *(1.3)* or to permanent structural elements of the trailer (longitudinal members, crossbars etc.). Transport catches (hooks and eyes) are welded to upper longitudinal frame (2), with one pair on each side of the trailer. Use certified and technically reliable securing measures. Worn straps, cracked securing catches, bent or corroded as well as other damage may disqualify use of the given element from use. Carefully read the information contained in the Operator's Manual for the given securing measure. Chocks, wooden blocks or other objects without sharp edges should be placed under the wheels of the trailer to prevent it from rolling. Trailer wheel blocks must be nailed to the low platform planks of the vehicle or secured in another manner preventing their movement. The number of securing elements (cables, straps, chains and stay etc.) and the force necessary for their tensioning depends on a number of things, including weight of the trailer, the construction of vehicle carrying trailer, speed of travel and other conditions. For this reason it is impossible to define the securing plan precisely. A correctly secured trailer does not change its position with regard to the transport in vehicle. The securing elements must be selected according to the guidelines of the Manufacturer of these elements. In case of doubt apply a greater number of securing straps in order to immobilise the trailer. If necessary, sharp edges of trailer should be protected at the same time protecting the securing straps from breaking during transport.

During reloading work, particular care should be taken not to damage parts of the machine's fittings or the lacquer coating. The tare weight of the trailer in condition ready for travel is given in table *(3.1).*

## DANGER

**Incorrect application of securing measures may cause an accident.**

## IMPORTANT!

**When being road transported on a motor vehicle the trailer must be mounted on the vehicle's platform in accordance with the transport safety requirements and the regulations.**

**Driver of the vehicle should be particularly careful during travel. This is due to the vehicle's centre of gravity shifting upwards when loaded with the machine.**

**Use only certified and technically reliable securing measures. Carefully read the manufacturer's instructions for the securing measures.**

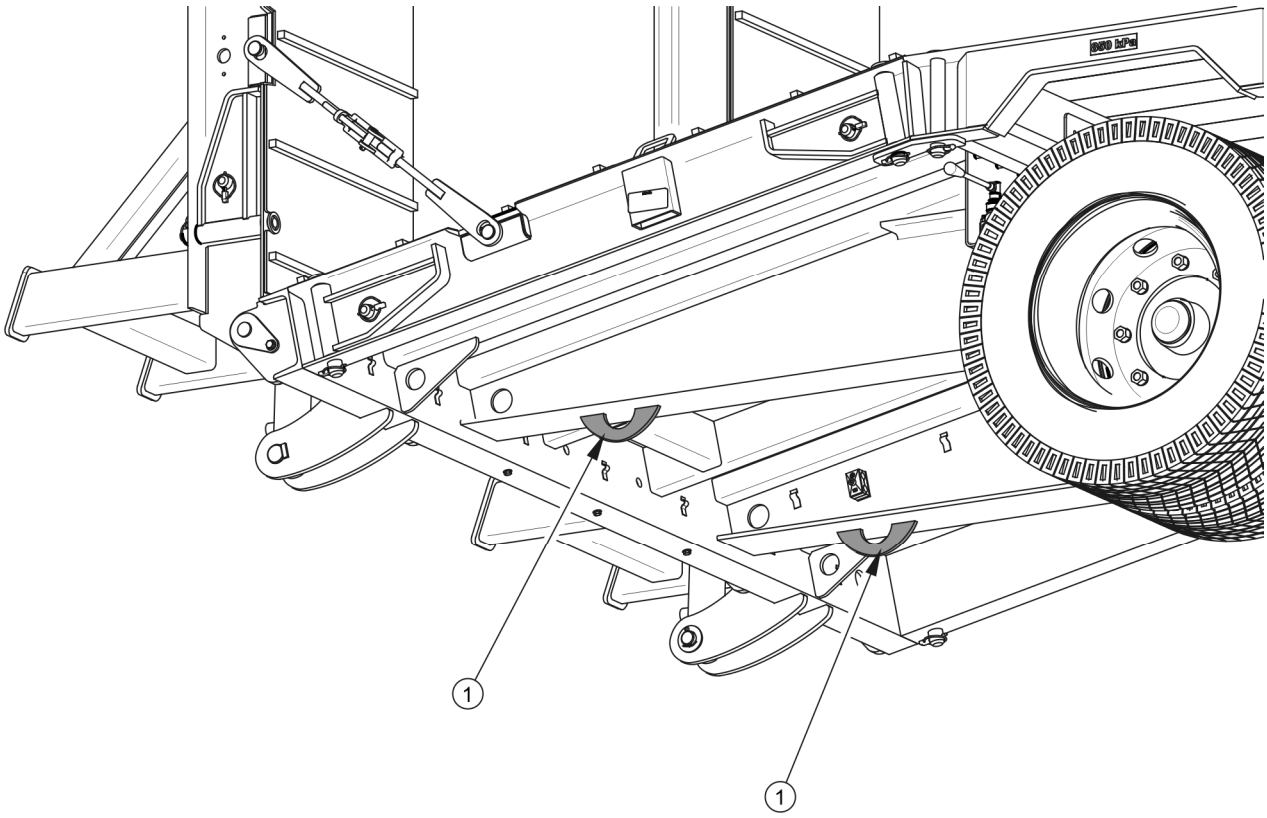


**FIG. 1.3 Positioning of transport lugs**

*(1) transport lug*

### 1.5.2 INDEPENDENT TRANSPORT BY THE USER.

In the event of independent transport by the user after purchase of the trailer, the user must read the trailer Operator's Manual and adhere to the recommendations contained therein. Independent transport involves towing the trailer with own agricultural tractor to destination. During transport adjust travel speed to the prevailing road conditions, but do not exceed the maximum design speed.

**IMPORTANT!**

**When transporting independently, the user must carefully read this operator's manual and observe its recommendations.**

## 1.6 ENVIRONMENTAL HAZARDS

A hydraulic oil leak constitutes a direct threat to the natural environment owing to its limited biodegradability. The negligible solubility of hydraulic oil in water does not cause extreme toxicity of organisms living in the aquatic environment. The formation of a film of oil on the water may be the direct cause of physical action on organism, perhaps causing change of oxygen values in the water because of lack of direct contact of air with the water. An oil leak into water reservoirs may however lead to a reduction of the oxygen content.

While carrying out maintenance and repair work, which involves the risk of an oil leak, this work should take place on an oil resistant floor or surface. In the event of oil leaking into the environment, first of all contain the source of the leak, and then collect the leaked oil using available means. Remaining oil should be collected using sorbents, or by mixing the oil with sand, sawdust or other absorbent materials. The oil pollution, once gathered up, should be kept in a sealed, marked, hydrocarbon resistant container. The container should be kept away from heat sources, flammable materials and food.

**DANGER**

**Used hydraulic oil or gathered remains mixed with absorbent material should be stored in a precisely marked container. Do not use food packaging for this purpose.**

Oil, which has been used up or is unsuitable for further use owing to a loss of its properties should be stored in its original packaging in the conditions described above. Waste oil should be taken to the appropriate facility dealing with the re-use of this type of waste. Waste code: 13 01 10. Detailed information concerning hydraulic oil may be found on the product's Material Safety Data Sheet.

**TIP**

**The hydraulic system of the trailer is filled with L-HL32 Lotos hydraulic oil.**

**IMPORTANT!**

**Waste oil should only be taken to the appropriate facility dealing with the re-use of this type of waste. Do NOT throw or pour oil into sewerage or water tanks.**

# 1.7 WITHDRAWAL FROM USE

In the event of decision by the user to withdraw the trailer from use, comply with the regulations in force in the given country concerning withdrawal from use and recycling of machines withdrawn from use. Before commencing dismantling, totally remove the oil from the hydraulic system and reduce air pressure completely in the pneumatic brake system (e.g. using air tank drain valve).

**DANGER**

**During disassembly, use proper tools, equipment (cranes, lifts, elevators, etc.) personal protective equipment, such as protective clothing, footwear, gloves, glasses, etc.**

**Avoid contact of skin with oil. Do not allow used hydraulic oil to spill.**

Worn out or damaged parts that cannot be reclaimed should be taken to a collection point for recyclable raw materials. Hydraulic oil should be taken to the appropriate facility dealing with the re-use of this type of waste.

*SECTION*

# 2

# SAFETY ADVICE

# 2.1 BASIC SAFETY RULES

## 2.1.1 USE OF TRAILER

- Before using the trailer, the user must carefully read this Operator's Manual and the *WARRANTY BOOK*. When operating the machine, the operator must comply with the recommendations.
- The trailer may only be used and operated by persons qualified to drive agricultural tractors with a trailer.
- The user is obliged to acquaint himself with the construction, action and the principles of safe usage of the machine.
- If the information contained in the Operator's Manual is difficult to understand, contact a seller, who runs an authorised technical service on behalf of the manufacturer, or contact the manufacturer directly.
- Careless and improper use and operation of the trailer, and non-compliance with the recommendations given in this operator's manual is dangerous to your health.
- Be aware of the existence of a minimal risk, and for this reason the fundamental basis for using this trailer should be the application of safety rules and sensible behaviour.
- The machine must never be used by persons, who are not authorised to drive agricultural tractors, including children and people under the influence of alcohol or other drugs.
- Non-compliance with the safety rules of this Operator’s Manual can be dangerous to the health and life of the operator and others.
- The trailer must not be used for purposes other than those for which it is intended. Anyone who uses the trailer other than the way intended takes full responsibility for himself for any consequences of this potentially improper use. Use of the machine for purposes other than those for which it is intended by the Manufacturer may invalidate the guarantee.

- The trailer may only be used when all the safety guards and other protective elements are technically sound and correctly positioned. In the event of loss or destruction of the safety guards, they must be replaced with new ones.
- Before lowering the ramps, make certain that there are no bystanders or other obstacles in the ramp lowering zone.
- Be especially careful when lowering or raising the ramps because the ramps are heavy and there is a risk of crushing.

### 2.1.2 HITCHING AND DISCONNECTING FROM TRACTOR

- Do NOT hitch trailer to tractor, if it does not fulfil the requirements made by the Manufacturer (minimal tractor power requirement, lack of required tractor hitch etc.) – compare table (*1.3*) *AGRICULTURAL TRACTOR'S REQUIREMENTS.* Before hitching trailer make certain that oil in external hydraulic system of tractor may be mixed with the hydraulic oil of the trailer.
- Before hitching trailer to tractor check that both machines are in good technical condition.
- While connecting the trailer to the tractor, use the appropriate hitch. After completing the coupling of the machine check the safety of the hitch. Carefully read the tractor Operator's Manual. If the tractor is equipped with an automatic hitch, make certain that the coupling operation is completed.
- Be especially careful when hitching the machine to tractor.
- When hitching, there must be nobody between the trailer and the tractor. A person assisting in the trailer hitching should stand in such a place (beyond the area of danger) in which he/she is continuously visible to the tractor driver.
- Coupling and uncoupling the trailer may only take place when the machine is immobilised by use of the parking brake.
- When the trailer hitching is completed, raise the support and set it to transport position.
- While placing the support in transport position or rest position, do not place hand between moving elements of the support. Ensure that the support is properly locked with the use of an interlock.

### 2.1.3 HYDRAULIC AND PNEUMATIC SYSTEMS

- When operating, the hydraulic and pneumatic systems are under high pressure.
- Regularly check the technical condition of the connections and the hydraulic and pneumatic leads. There must no oil or air leaks.
- In the event of malfunction of the hydraulic or pneumatic system, do not use the trailer until the malfunction is corrected.
- When connecting the hydraulic lines to the tractor, make sure that the tractor hydraulic system and trailer are not under pressure. If necessary reduce residual pressure in the system.
- In the event of injuries being caused by pressurised hydraulic oil, contact a doctor immediately. Hydraulic oil may find its way under the skin and cause infections. In the event of contact of oil with eye, rinse with large quantity of water and in the event of the occurrence of irritation consult a doctor. In the event of contact of oil with skin wash the area of contact with water and soap. Do NOT apply organic solvents (petrol, kerosene).
- Use the hydraulic oil recommended by the Manufacturer.
- After changing the hydraulic oil, the used oil should be properly disposed of. Used oil or oil, which has lost its properties, should be stored in original containers or replacement containers resistant to action of hydrocarbons. Replacement containers must be clearly marked and appropriately stored.
- Do not store hydraulic oil in packaging designed for storing food or foodstuffs.
- Rubber hydraulic lines must be replaced every 4 years regardless of their technical condition.
- The ramps can be unfolded only after removing interlocks and releasing locks.

### 2.1.4 LOADING AND UNLOADING

- Loading and unloading work should be carried out by someone experienced in this type of work.

- The load must not protrude further out than the load platform's front wall. The load must be arranged in such a way that it does not threaten the stability of the trailer, and does not hinder driving.
- The trailer is not intended for transporting people, animals or hazardous materials, to which separate regulations apply.
- The load must be arranged in such a way that it does not threaten the stability of the trailer, and does not hinder driving.
- The arrangement of the load may not cause an overload on the axle or hitch system of the trailer or tractor.
- Do NOT climb on the load platform during loading. Secure the load only when the machine rests on the load platform planks. If the load requires backing (e.g. in order to position the machine properly), ensure that the backing is properly secured against relocation.
- Oversize load may be transported on public roads only if a travel permit is obtained from a competent office.
- Loading equipment may work on the load platform only if the total weight of the loading equipment and the load does not exceed the maximum carrying capacity of the trailer.
- Be especially careful when opening or closing the ramps because there is a risk of crushing.
- Unfolded ramps must adhere to level surface.
- Unfolded ramps must be at the same height.
- Incorrect load distribution and overloading the machine may cause the trailer to tip over or cause damage to its components.
- Unloading and loading of trailer may only take place when the machine is positioned on level and hard surface and connected to tractor. Tractor and trailer must be placed to drive forwards.
- Ensure that there are no bystanders in the unloading or loading zone. Before unfolding the ramps, guarantee proper visibility and make certain that there are no bystanders near the trailer.

- During loading and unloading the trailer the drawbar eye and the tractor hitch are subjected to great vertical loading.
- After completion of loading, make certain that no tools remain on the load platform.
- Ends of load fixing belts, chains or ropes should be secured in such a manner as to ensure that they do not fall down onto road surface and do not become tangled with moving elements of the trailer (wheels – brake drums, hydraulic cylinders etc.).

### 2.1.5 TRANSPORTING THE MACHINE

- During travel on public roads comply with the road traffic regulations and transport regulations in force in a given country, in which the trailer is used.
- Do not exceed the permitted speed arising from road conditions and design limitations. Adjust travel speed to the prevailing road conditions, trailer load and road traffic regulations limits.
- The machine must NOT be left unsecured. When not connected to the tractor, the trailer must be immobilised with parking brake and protected against rolling with chocks or other objects without sharp edges placed under the front and back trailer wheels.
- Before driving off check that the parking brake is released. The trailer's ramps must be folded and properly secured using ramps' interlocks.
- Travelling with ramps which are unfolded and not secured with ramps' interlocks is forbidden. Before moving off make sure that the support is properly placed in transport position and secured.
- Before moving check that the trailer is correctly hitched to the tractor (in particular check security of hitching pin).
- The trailer with unfolded load platform width extensions may travel on public roads only if a permit to move oversize load is obtained from a competent office in a given country and the requirements concerning travel conditions specified in the road traffic regulations are adhered to. Otherwise, such trailer must not travel on public roads.

- Before using the trailer always check its technical condition, especially in terms of safety. In particular, check the technical condition of the hitch system, the axle system, the brake system, indicator lights and the connective elements of the hydraulic, pneumatic and electrical systems.

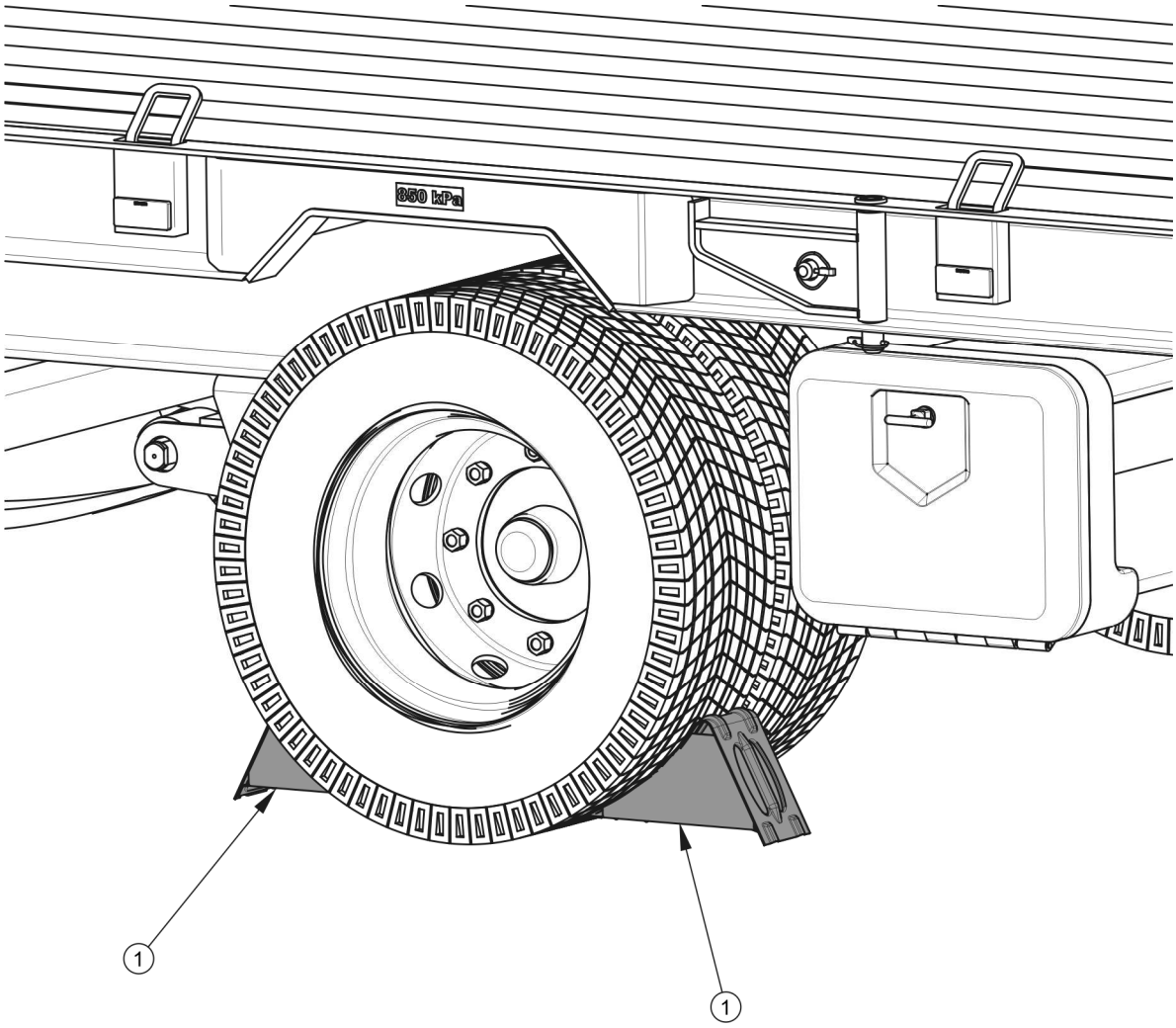


**FIG. 2.1 Method of placing chocks**

*(1) wheel chock*

- The trailer is designed to operate on slopes up to 8°. Driving trailer across ground with steeper slopes may cause the trailer to tip over as a result of loss of stability. Prolonged driving across steep ground may lead to loss of braking efficiency.
- While driving on public roads the trailer must be fitted with a certified or authorised reflective warning triangle.

- Periodically drain water from the air tank in pneumatic system. During frosts, freezing water may cause damage to pneumatic system components.
- Chocks should be placed only under one wheel (one in front of the wheel, the second behind the wheel - figure (*2.1*)).
- Reckless driving and excessive speed may cause accidents.
- A load protruding beyond the edge of the trailer should be indicated according to the road traffic regulations. Do NOT transport loads forbidden by the Manufacturer.
- Do NOT exceed the trailer's maximum carrying capacity. Exceeding the carrying capacity may lead to damage to the machine, loss of stability and danger while driving. The brake system is adjusted to the gross weight of the trailer, exceeding the weight limit causes drastic reduction of basic braking effectiveness.

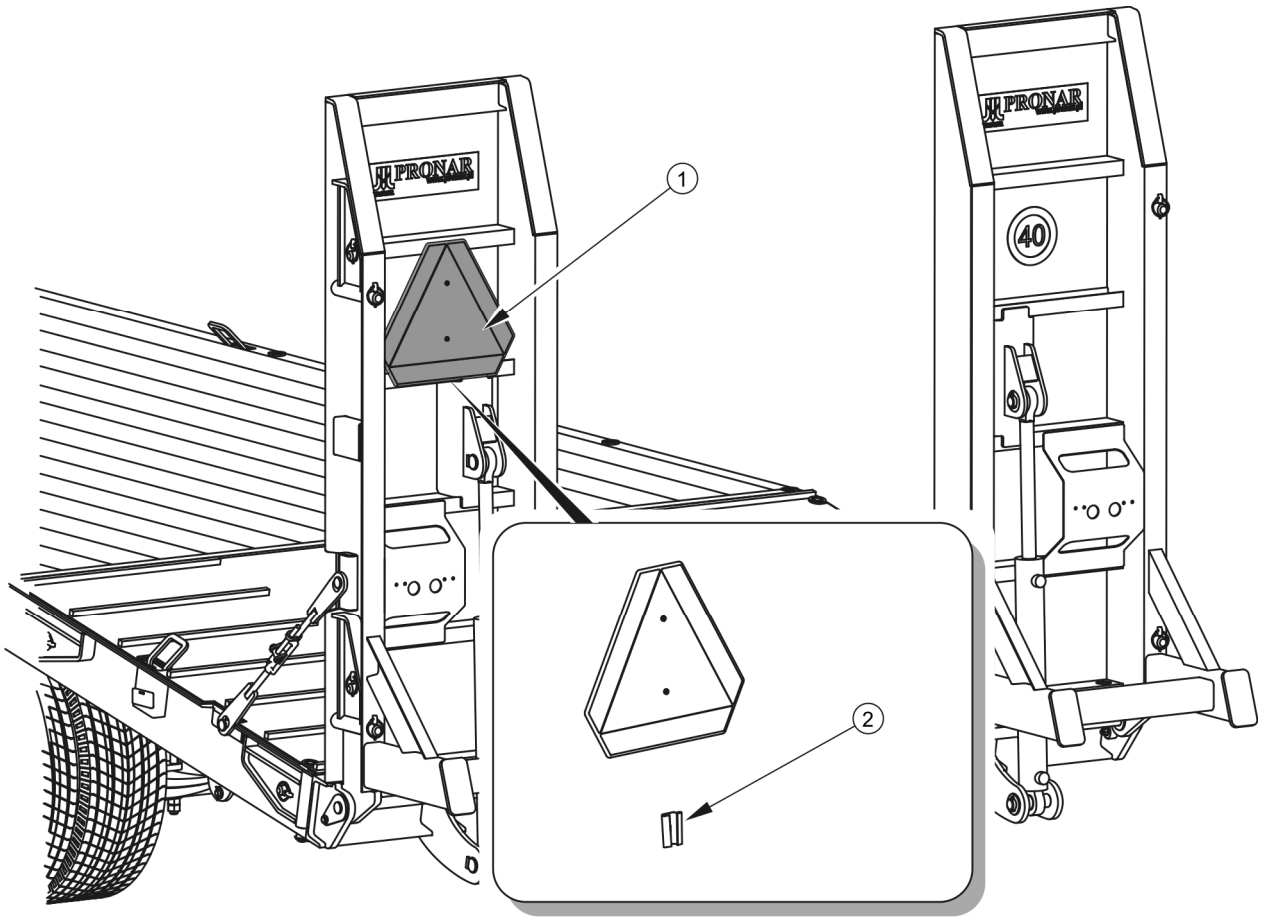


**FIG. 2.2 Mounting place for slow-moving vehicle sign**

*(1) warning sign, (2) attachment point*

- Before driving on public roads, place the triangular slow-moving vehicle warning sign on the left folded ramp - figure (*2.2*). The triangular warning sign should be attached using the specifically prepared holder (2).
- Load must be uniformly distributed and it must not obstruct visibility or hinder driving. The load must be secured so that it cannot move or fall over. The load should be fixed using sufficiently strong chains, belts or ropes with a tightening mechanism.
- During reversing one should use the assistance of another person. During manoeuvring the person helping must stay at a safe distance from the danger zone and be visible all the time to the tractor driver.
- Do NOT attempt to board trailer while travelling.
- Do NOT park the trailer on a steep slope.

### 2.1.6 TYRES

- When working with tyres, the trailer should be immobilised with parking brake and secured against rolling by placing chocks under wheel. Wheels can be taken off the trailer axle only when the trailer is not loaded.
- Repair work on the wheels or tyres should be carried out by persons trained and entitled to do so. This work should be carried out using appropriate tools.
- Inspect tightness of nuts after first use of trailer, after first travel under load and then every 6 months of use or every 25,000 km. In the event of intensive work check the nut tightening at least every 100 km. The inspection should be repeated individually if a wheel has been removed from the wheel axle.
- Avoid potholes, sudden manoeuvres or high speeds when turning.
- Check the tyre pressure regularly. Pressure and tyres should be also checked after the whole day of intensive work. Please note that higher temperatures could raise tyre pressure by as much as 1 bar. At high temperatures and pressure, reduce load or speed. Do not release air from warm tyres to adjust the pressure or the tyres will be underinflated when temperatures return to normal.
- Protect tyre valves using suitable caps to avoid soiling.

## 2.1.7 MAINTENANCE

- During the warranty period, any repairs may only be carried out by Warranty Service authorised by the manufacturer. After the expiry of the warranty period it is recommended that possible repairs to the trailer be performed by specialised workshops.
- In the event of any fault or damage whatsoever, do not use the trailer until the fault has been fixed.
- During work use the proper, close-fitting protective clothing, gloves, protective goggles and appropriate tools.
- Any modification to the trailer frees the manufacturer from any responsibility for damage or detriment to health, which may arise as a result.
- The trailer can only be stood on when it is absolutely motionless and the tractor engine is switched off. Tractor and trailer should be secured using parking brake and in addition chocks should be placed beneath trailer wheel. Ensure that unauthorised persons do not have access to the tractor cab.
- Service inspections of the trailer should be carried out according to the frequency specified in this Operator's Manual.
- Regularly check the condition of nut and bolt connections, in particular connections of drawbar eye with drawbar and wheel nuts.
- Before beginning repair works on hydraulic or pneumatic systems reduce oil or air pressure completely.
- Servicing and repair work should be carried out in line with the general principles of workplace health and safety. In the event of injury, the wound must be immediately cleaned and disinfected. In the event of more serious injuries, seek a doctor's advice.
- Repair, maintenance and cleaning work should be carried out with the tractor's engine switched off and the ignition key removed. Tractor and trailer should be secured using parking brake and in addition chocks should be placed beneath trailer wheel. Ensure that unauthorised persons do not have access to the tractor cab.

- During maintenance or repair work trailer may be unhitched from tractor, but secured with chocks and parking brake.
- Should it be necessary to change individual parts, use only those parts indicated by the Manufacturer. Non-adherence to these requirements may put the user and other people's health and life at risk, and also damage the machine and invalidate the guarantee.
- Before welding or electrical work, the trailer should be disconnected from the power supply. The paint coating should be cleaned. Burning paint fumes are poisonous for people and animals. Welding work should be carried out in a well-lit and well ventilated space.
- During welding work pay attention to flammable or fusible elements (parts of the pneumatic, electric and hydraulic systems, plastic parts). If there is a risk that they will catch fire or be damaged, they should be removed or covered with non-flammable material before commencing welding work. Before beginning work prepare a $CO_2$ or foam extinguisher.
- In the event of work requiring the trailer to be raised, use properly certified hydraulic or mechanical lifts for this purpose. After lifting the machine, stable and durable supports must also be used. Work must not be carried out under a trailer, which has only been raised with a lift or jack.
- The trailer must not be supported using fragile elements (bricks or concrete blocks).
- After completing work associated with lubrication, remove excess oil or grease. The trailer should be kept clean and tidy.
- Be especially careful when climbing on top of the load platform. Do not use mudguards, wheels, toolbox, water tank etc. for climbing on top of the load platform. Before climbing on top of the load platform, immobilise the trailer using parking brake and chocks placed under the wheels.
- Do not make independent repairs of control valve, brake cylinders and braking force regulator. In the event of damage to these elements, repair should be entrusted to authorised service point or replace elements with new parts.

- Do NOT make repairs to drawbar and drawbar eye (by straightening, pad welding or welding). Damaged drawbar eye or drawbar should be replaced.
- Regularly check technical condition and mounting of all guards and protective elements.
- Water tank should be filled only with clean water. Chemicals or other fluids must not be stored in the tank. Water stored in the tank is not potable.

## 2.2 DESCRIPTION OF MINIMAL RISK

Pronar Sp. z o. o. in Narew has made every effort to eliminate the risk of accidents. There is, however, a certain minimal risk, which could lead to an accident, and this is connected mainly with the actions described below:

- using the trailer for purposes other than those for which it is intended,
- being between the tractor and the trailer while the engine is working and when the machine is being attached or hitched to second trailer
- being on the machine while the engine is working,
- not maintaining safe distance during loading or unloading of trailer,
- operation of the trailer by persons under the influence of alcohol,
- making modifications to the machine without the consent of the Manufacturer,
- cleaning, maintenance and technical checks of the trailer,
- operating the trailer with the safety guards removed or faulty,
- presence of persons or animals in areas invisible from the driver's position.

The minimal risk may be kept to a minimum by following the recommendations below:

- prudent and unhurried operation of the machine,
- sensible application of the remarks and recommendations contained in the Operator's Manual,
- maintaining safe distance from forbidden or dangerous places during unloading, loading and hitching trailer,
- carrying out repair and maintenance work in line with operating safety rules,

- carrying out repair and maintenance work by persons trained to do so,
- using close fitting protective clothing, and appropriate tools,
- ensuring unauthorised persons have no access to the machine, especially children.
- maintaining safe distance from forbidden or dangerous places
- a ban on being on the machine during travel, loading or unloading.

# 2.3 INFORMATION AND WARNING DECALS

The trailer is labelled with the information and warning decals mentioned in table (*2.1)*. The symbols are positioned as presented in figure (*2.3*). Throughout the time it is in use, the user of the machine is obliged to take care that notices and warning and information symbols located on the trailer are clear and legible. In the event of their destruction, they must be replaced with new ones. Safety decals are available from your PRONAR dealer or directly from PRONAR customer service. New assemblies, changed during repair, must be labelled once again with the appropriate safety signs. During trailer cleaning do not use solvents which may damage the coating of information label stickers and do not subject them to strong water jets.

**TAB. 2.1 Information and warning decals**

| ITEM | DECAL | MEANING OF SYMBOL |
|---|---|---|
| **1** | | Caution!<br>Before starting work, carefully read the Operator's Manual. |

| ITEM | DECAL | MEANING OF SYMBOL |
|---|---|---|
| **2** | 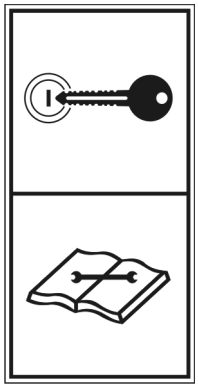 | Before beginning servicing or repairs, consult Operator's Manual, switch off engine and remove key from ignition. |
| **3** | | Danger of crushing or severing. Do not place hands between the ramps and the trailer frame. |
| **4** | | Grease the trailer according to the recommendations in the Operator's Manual |
| **5** | 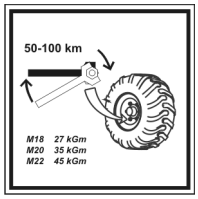 | Regularly check if the nuts and bolts fixing the wheels and other components are properly tightened. |
| **6** | **850 kPa** | Air pressure in the tyres (standard tyres). |
| **7** | **30 kN** | Permissible hitching system loading. |

| ITEM | DECAL | MEANING OF SYMBOL |
|---|---|---|
| **8** | O Z | Position of support cut-off valve. |
| **9** | 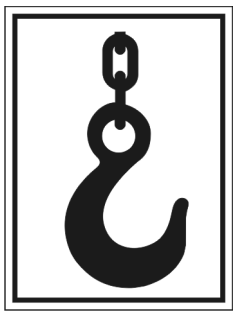 | Marking of mounting points for belts, ropes, chains or other devices for securing load on the platform. |
| **10** | PRONAR www.pronar.pl PRONAR | Manufacturer's decal. |
| **11** | RC2100 | Trailer version. |
| **12** | 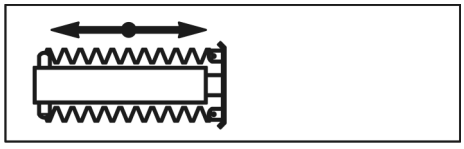 | Information decal identifying the hydraulic support connection. |
| **13** | 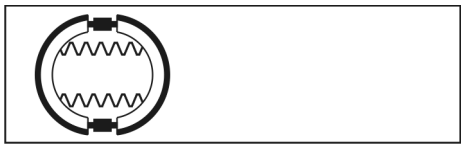 | Information decal identifying the hydraulic brake connection. |
| **14** | **Ładowność w wersji "standard" - 14650 kg**<br>**Przy wyposażeniu opcjonalnym ładowność pomniejszyć o:**<br>**- poszerzenia podłogi + deski: - 225 kg**<br>**- wyciągarka hydrauliczna: - 100 kg**<br>**- podłoga dębowa: - 90 kg**<br>**- koło zapasowe wraz z mocowaniem (1 sztuka): - 55 kg**<br>**- hydraulicznie opuszczane/podnoszone najazdy: - 40 kg**<br>**- skrzynka narzędziowa (pusta): - 8 kg**<br>**- zbiornik na wodę (pusty): - 6 kg**<br>**Ładowność z pełnym wyposaż. - 14126 kg** | "Carrying capacity" decal |

| ITEM | DECAL | MEANING OF SYMBOL |
|---|---|---|
| **15** | **Zasilanie / Supply** | Information decal identifying the supply connection of the ramp hydraulic system. |
| **16** | **Powrót / Return** | Information decal identifying the return connection of the ramp hydraulic system. |

*Numbers in the item column correspond to labels in figure (2.3)*

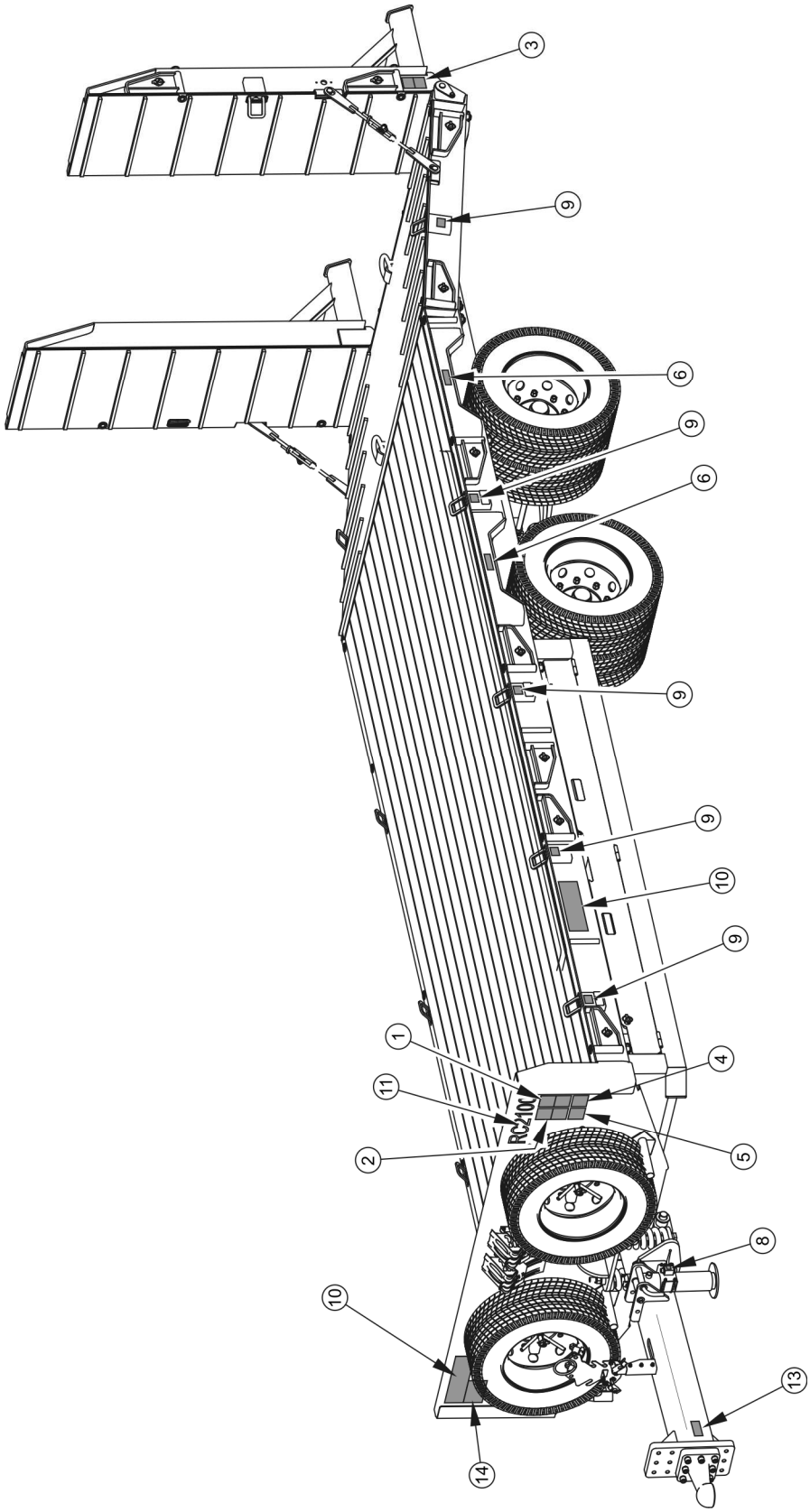


**FIG. 2.3 Locations of information and warning decals.**

*SECTION*

# 3

# DESIGN AND OPERATION

# 3.1 TECHNICAL SPECIFICATION

**TAB. 3.1 Basic technical specification of Pronar RC2100 trailer**

| CONTENTS | UNIT | DATA |
|---|---|---|
| **Dimensions** | | |
| Length | mm | 9 450 |
| Width | mm | 2 550 |
| Height (in condition ready for travel) | mm | 2 460 |
| Floor width | mm | 2 540 |
| Ramps length | mm | 1 900 |
| Load platform length | mm | 7 000 |
| Axle track | mm | 1 865 |
| Axle base | mm | 1 325 |
| **Weights** | | |
| Maximum gross weight | kg | 19 000 |
| Carrying capacity | kg | 14 650 |
| Tare weight | kg | 4 350 |
| **Tyres** | | |
| Tyre dimensions | - | 215/75R17.5 |
| Air pressure in the tyres | kPa | 850 |
| **Technical specification of the winch** | | |
| Maximum pull force | kg | 6 800 |
| Oil pressure | bar | 160 |
| Rope diameter | mm | ∅12 |
| Rope length | m | 30 |
| **Other parameters** | | |
| Lift of load surface | mm | 930 |
| Axle load | kg | 8 000 |
| Hitch load | kg | 3 000 |
| Maximum design speed | km/h | 40 |
| Nominal voltage of electrical system | V | 12 |
| Hydraulic oil demand | l | 14 |

**TIP**

**Carrying capacity and tare weight of the trailer depend on machine configuration. Detailed data concerning carrying capacity is given on information decal – item 14, table (*2.1*).**

# 3.2 TRAILER CONSTRUCTION

## 3.2.1 CHASSIS AND LOAD PLATFORM

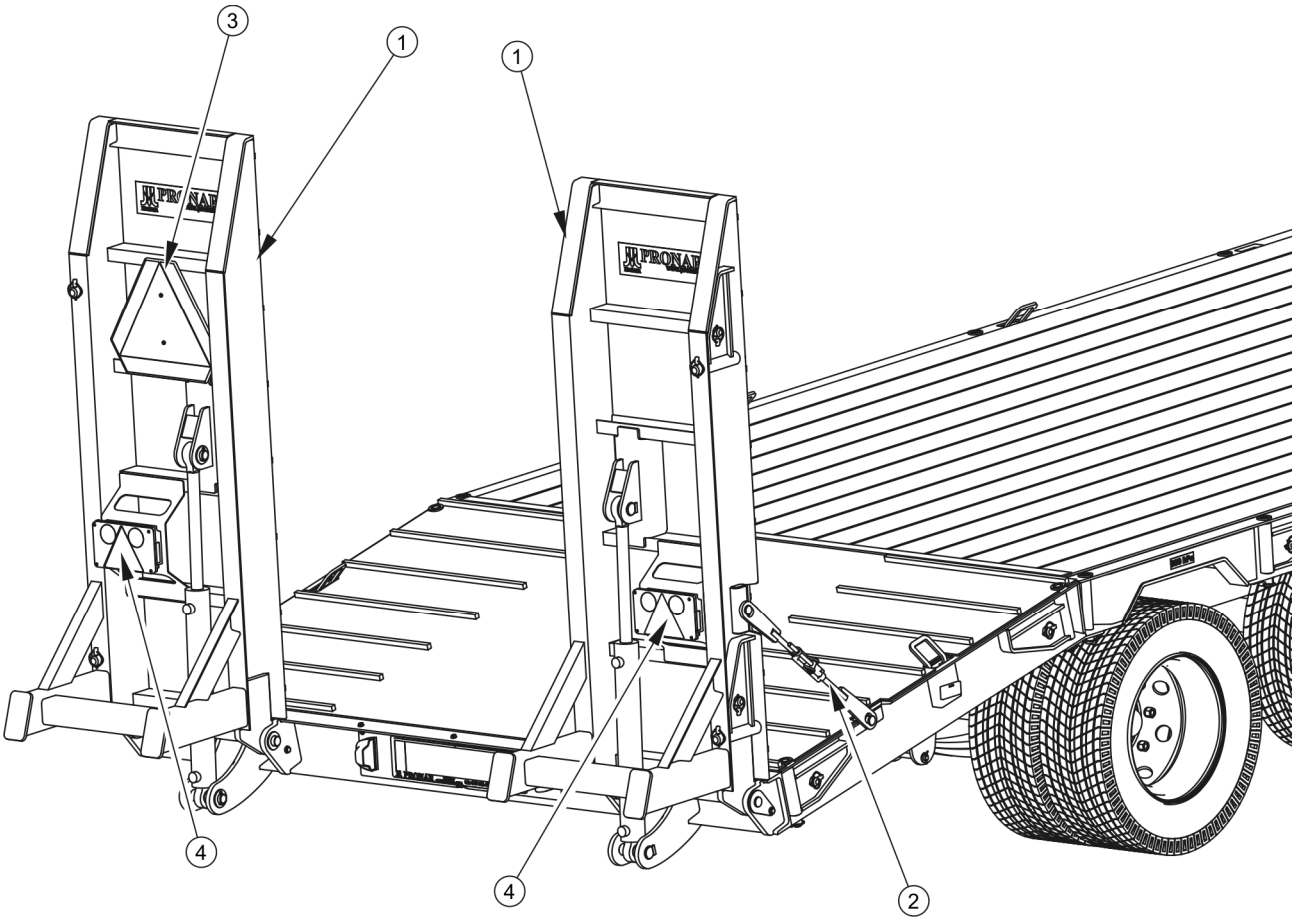


**FIG. 3.1 Rear view**

*(1) ramp, (2) ramp interlock, (3) warning sign, (4) rear lamp assembly*

Low chassis trailer is a welded structure made from steel profiles. The main support elements are two longitudinal members connected with crossbars. Two ramps are installed in the rear part of the frame (1) – Figure (*3.1*). As standard, the ramps are lowered manually by trailer operator. Optionally, the ramps can be controlled by means of hydraulic system. The ramps are secured using interlocks (2) and locking pins. Lighting elements and warning signs and

reflective lights are attached to the bottom side of the ramps – rear lamp assembly (4) and slow-moving vehicle warning sign (3). When travelling, the ramps must be folded and secured using provided interlocks.

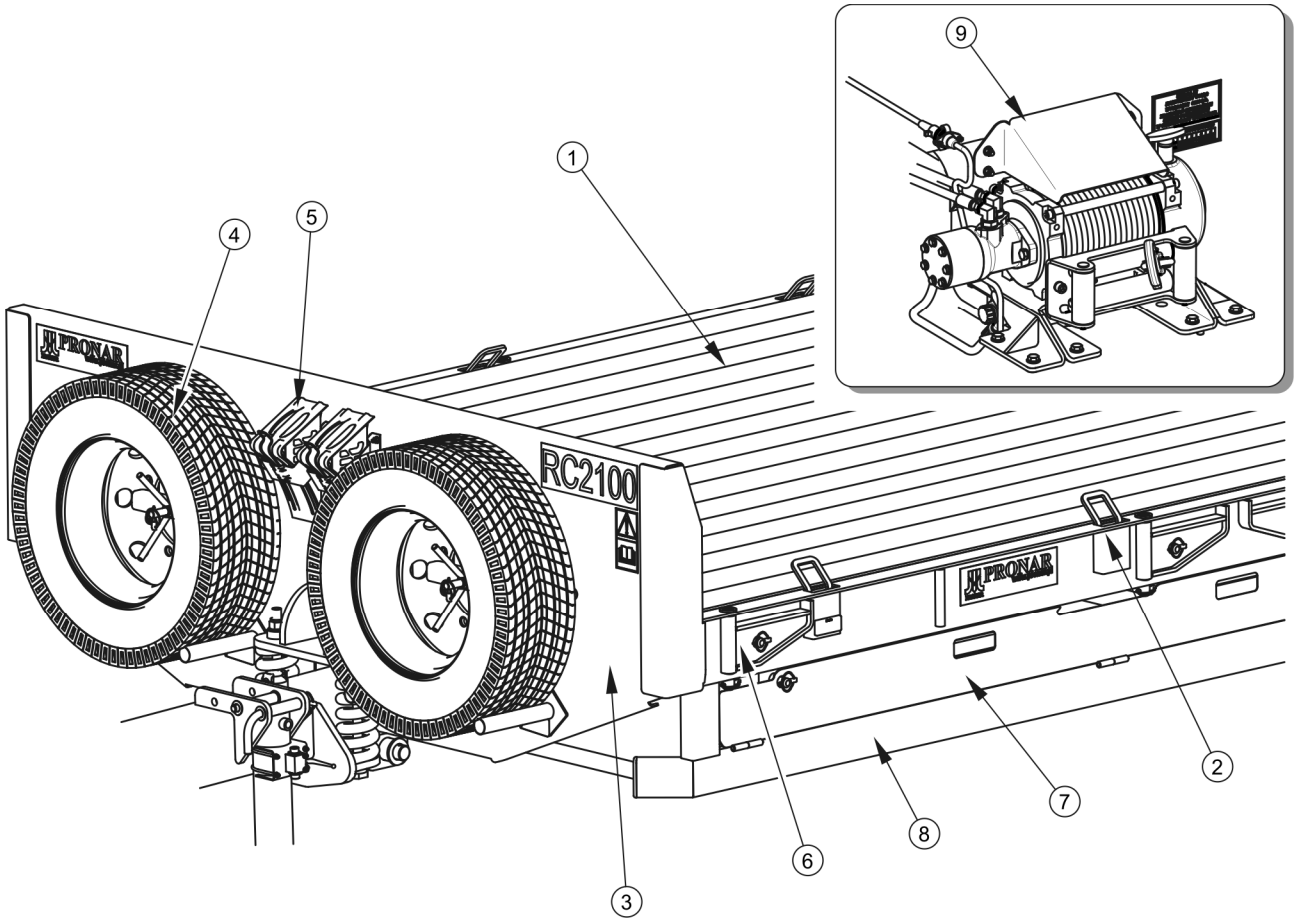


**FIG. 3.2 Front view**

*(1) floor planks, (2) fixing lugs, (3) front wall, (4) spare wheel, (5) wedge, (6) floor extension bracket, (7) holder for spare planks, (8) under-run protective device, (9) winch*

The load platform floor is made of profiled planks (1) Figure (*3.2*) with a thickness of 45 mm. Load placed on the platform is secured with belts, ropes or chains, which are attached to fixing lugs (2) located along the whole platform, on both sides of the trailer. The fixing lugs are marked with information decals (9) – table (*2.1*). On the front side, the load platform is limited by wall (3) to which spare wheels (4) (optional equipment) and chocks (5) are attached. Optional winch (9) with hydraulic drive system is also installed behind the front wall.

On the left side of the frame, between under-run protective device (8) and floor surface, there is holder (7) (optional equipment) for storing floor planks which are used for widening the load

platform. The holder is locked and secured with cotter pins. Along the whole length of the load platform and on the ramps (on the outside), there are floor extension brackets (6) (optional equipment) which are unfolded when transporting oversize machines. During normal travel of the trailer, the brackets must be folded and secured with cotter pins. On the right side of the frame, in front of the front wheel, there is a toolbox (optional equipment) and parking brake mechanism.

### 3.2.2 DRAWBAR OF TRAILER

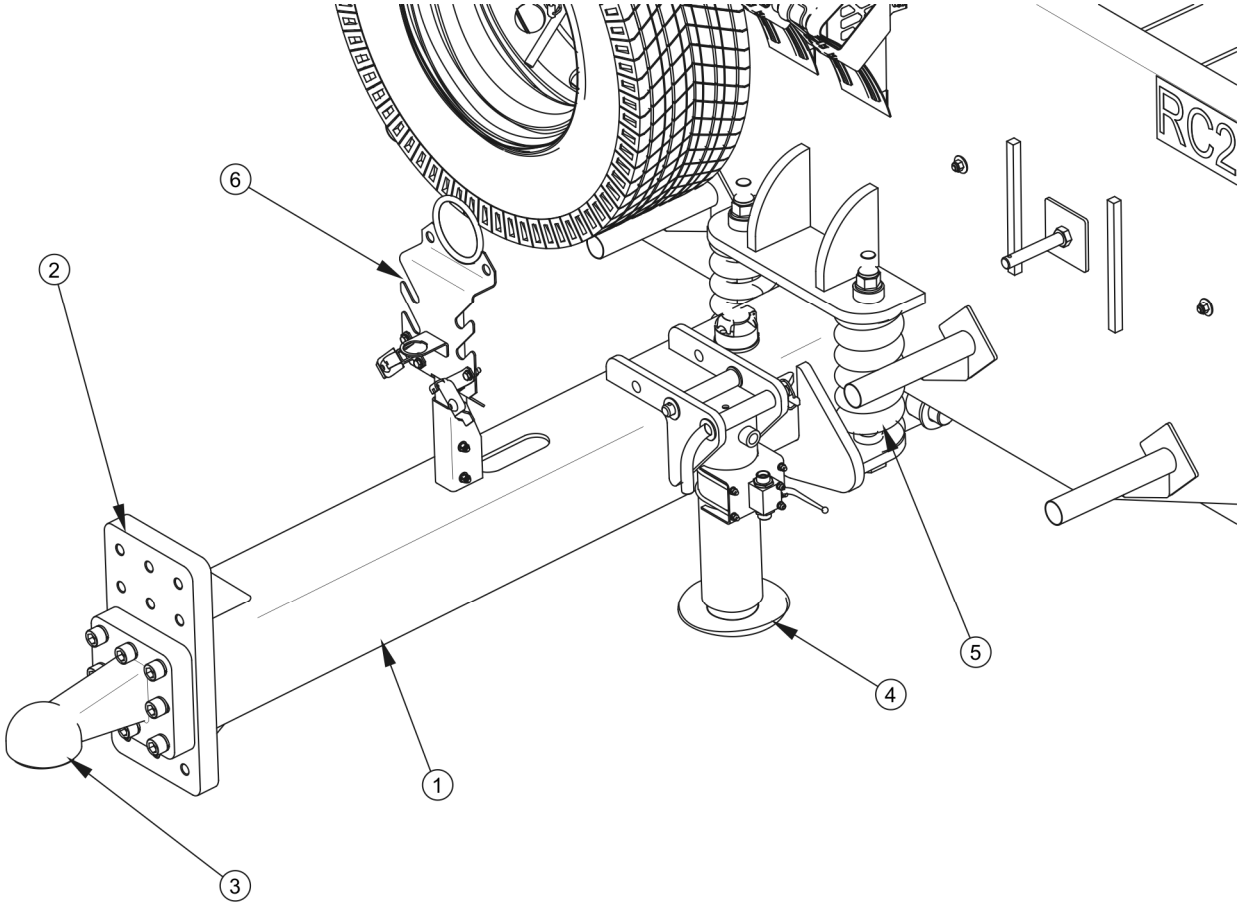


**FIG. 3.3 Drawbar**

*(1) rotary drawbar, (2) drawbar faceplate, (3) drawbar hitching eye, (4) parking stand, (5) spring, (6) line bracket*

In the front part of the trailer, Figure (*3.3*), there is a rotary drawbar (1) with shock absorbing springs (5). Drawbar hitching eye (3) is bolted to the drawbar faceplate (2). Depending on configuration, fixed drawbar with a ∅50 mm eye, fixed drawbar with a ∅40 mm eye, rotating drawbar with a ∅50 mm eye and ball drawbar with diameter of ∅80 mm (standard

equipment) can be used. The faceplate has a set of holes allowing to conveniently change the height of the trailer drawbar depending on the tractor's hitch. On the left side of the drawbar beam, there is a hydraulically controlled straight parking stand (4).

### 3.2.3 SUSPENSION

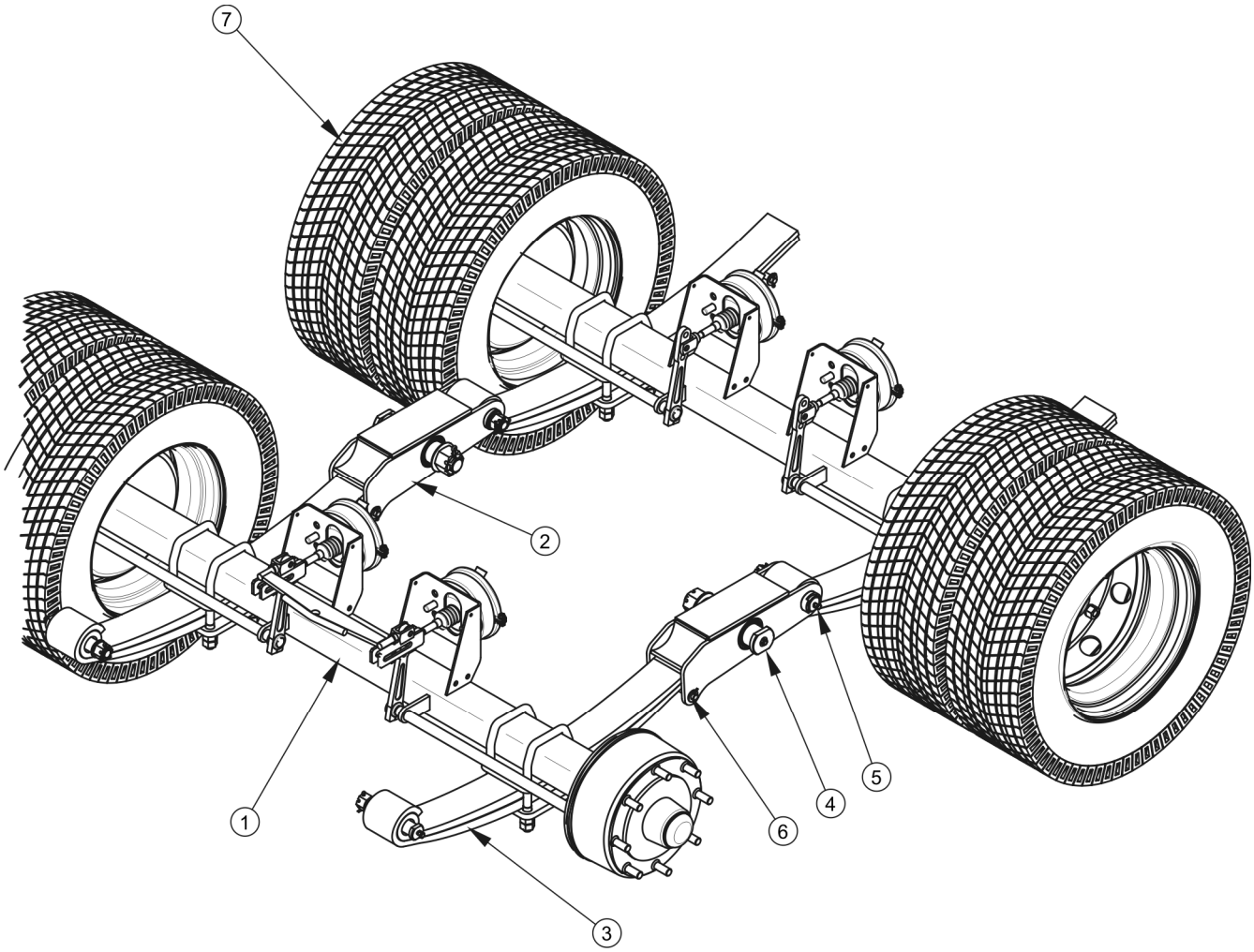


**FIG. 3.4 Tandem suspension**

*(1) wheel axle, (2) rocker arm, (3) parabolic leaf spring, (4) rocker arm pin, (5) lubricated leaf spring pin, (6) smooth leaf spring pin, (7) twin wheels*

Axles (1), Figure (*3.4*), in a tandem arrangement, are attached to parabolic leaf springs (3) using an absorber plate and U bolts. The parabolic leaf springs are connected together by means of rocker arms (2). The complete axle system is connected with the frame by means of fixing brackets welded to the chassis longitudinal members and axle system pins. Axles are made from square bars terminated with pins, on which wheel hubs are mounted on cone

bearings. Brake drums with shoe brakes are activated by mechanical expander cams, which are operated by pneumatic cylinders bolted to axle brackets.

### 3.2.4 MAIN BRAKE

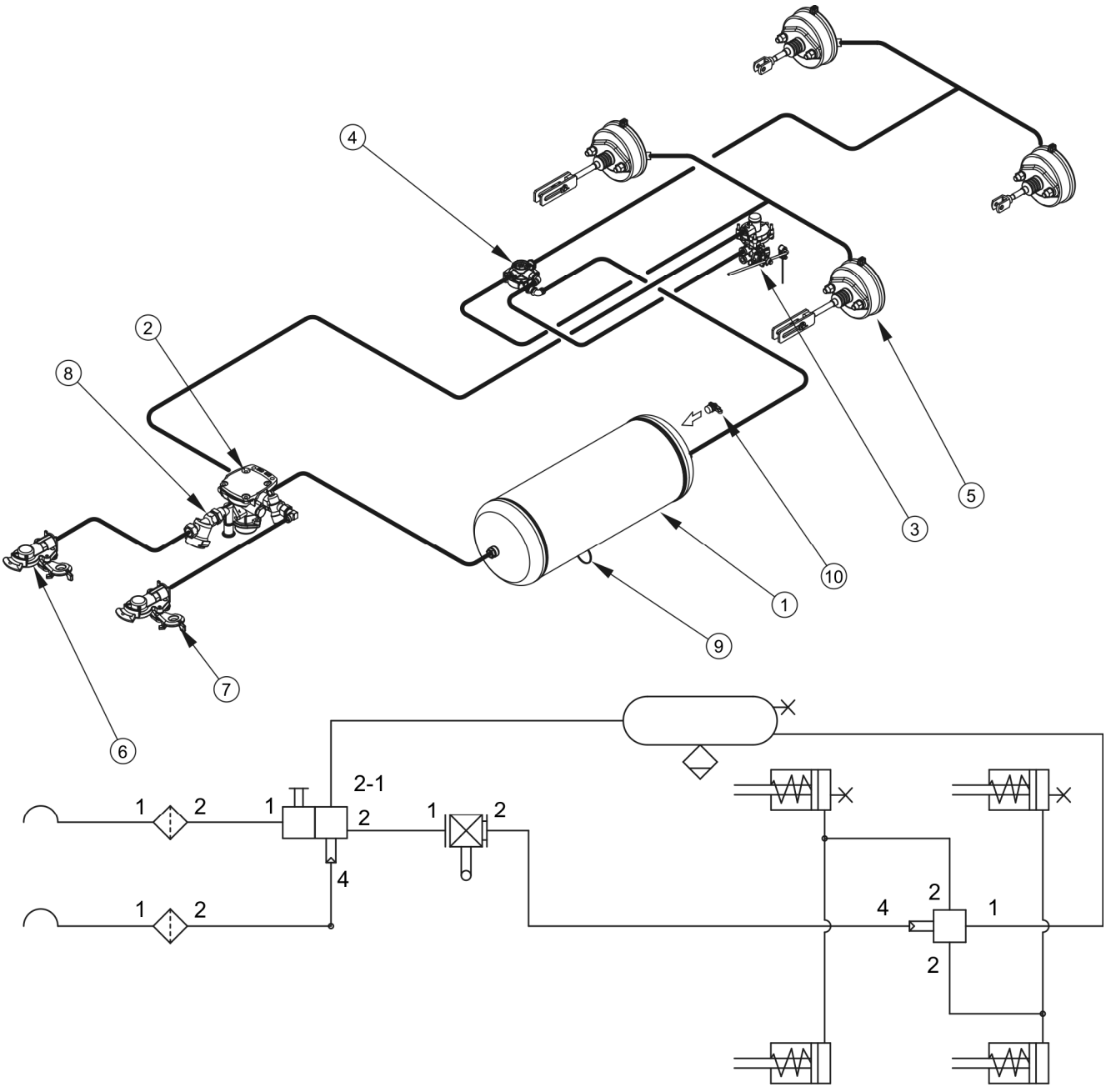


**FIG. 3.5 Double line pneumatic brake construction and system diagram**

*(1) air tank, (2) control valve, (3) automatic brake force regulator, (4) transmission valve, (5) pneumatic cylinder, (6), (7) lead connectors, (8) air filter, (9) drain valve (10) air tank control connectors*

The trailer is equipped with one of two types of working brake:

- double line pneumatic brake system with automatic regulator, figure *(3.5),*
- hydraulic brake system, figure *(3.6*).

The pneumatic or hydraulic brakes are activated from the tractor driver's cab by pressing on the brake pedal. The function of the control valve (2), Figure (3.5), is to activate the trailer's brakes simultaneously when tractor's brakes are applied Furthermore, in case of an inadvertent disconnection of the line between the trailer and the tractor, the control valve will automatically activate trailer's brakes. Valve used in the system is equipped with a circuit causing the brakes to be applied when trailer is disconnected from the tractor. When compressed air line is connected to the tractor, the device automatically applying the brakes now changes its position to allow normal brake operation.

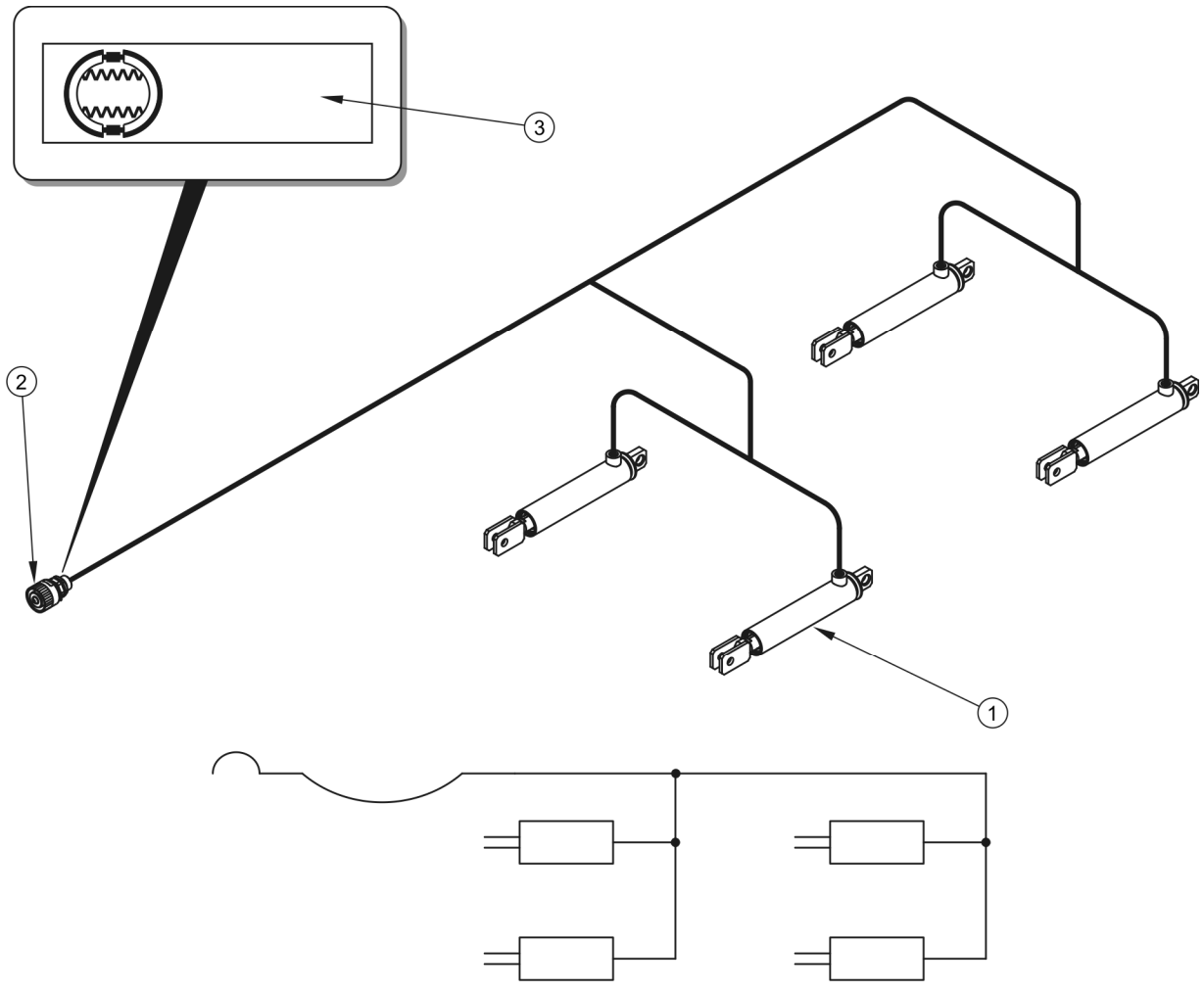


**FIG. 3.6 Hydraulic brake system construction and diagram**

*(1) hydraulic cylinder, (2) hydraulic quick coupler, (3) information decal*

Brake cylinders used in the systems are mounted on specially designed brackets welded to the wheel axles. They are membrane cylinders. Air supplied to cylinder exerts pressure on membrane which in turn moves cylinder piston and rotates to axle expander lever. Return of cylinder to neutral position is assisted by draw back springs. Relay valve (4) is designed for increasing the speed of air transmission to cylinders during braking. Automatic brake force regulator (3) adapts braking pressure to the trailer load. During normal work it does not require service.

Connections of pneumatic conduits are marked with coloured safety covers, which enable identification of individual conduits:

- red – supply connection,
- yellow - control connection.

Each pneumatic connection is equipped with a cut-off valve, which automatically cuts off outflow of air from pneumatic conduit in the event of disconnection from agricultural tractor socket.

### 3.2.5 PARKING BRAKE

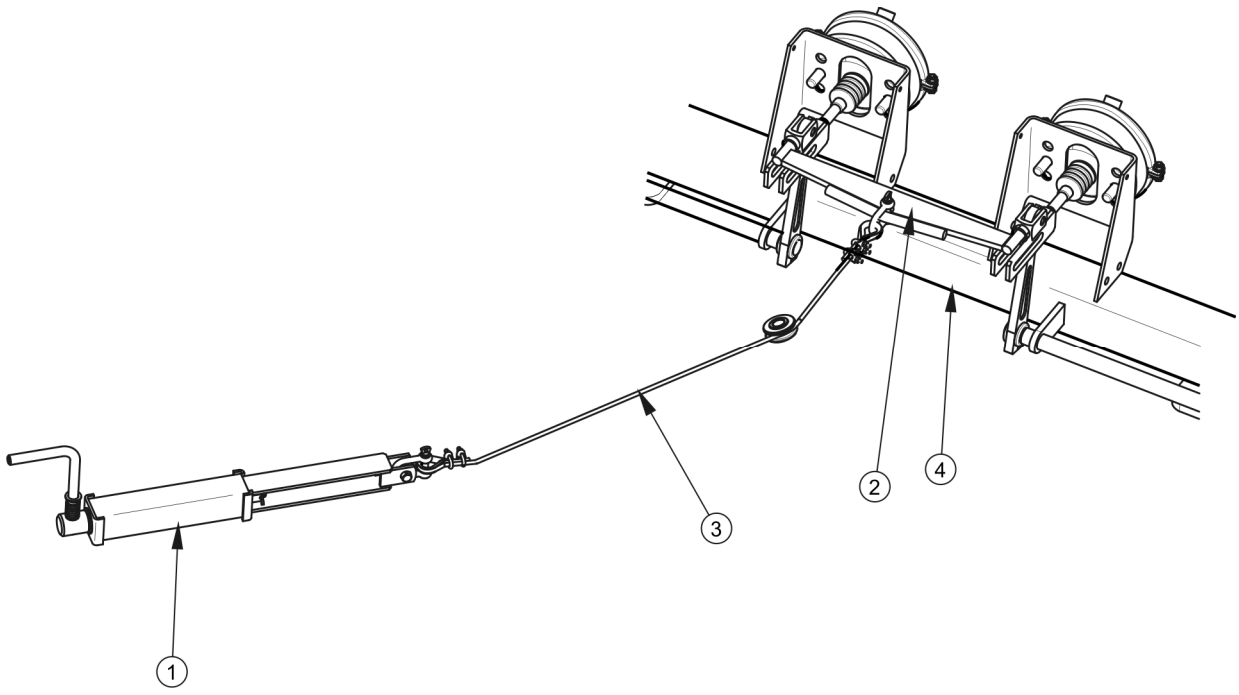


**FIG. 3.7 Parking brake**

*(1) crank mechanism, (2) equalising bar, (3) cable, (4) wheel axle*

The parking brake is used for immobilising trailer while standing motionless. The brake crank mechanism (1) is attached to the right longitudinal member of the frame. Steel cable (3) is connected to the front axle expander arms through equalising bar (2). Tightening the cable causes tilting of the expander arms, which part the brake shoes immobilising the trailer while standing motionless.

### 3.2.6 HYDRAULIC SYSTEM OF THE RAMPS

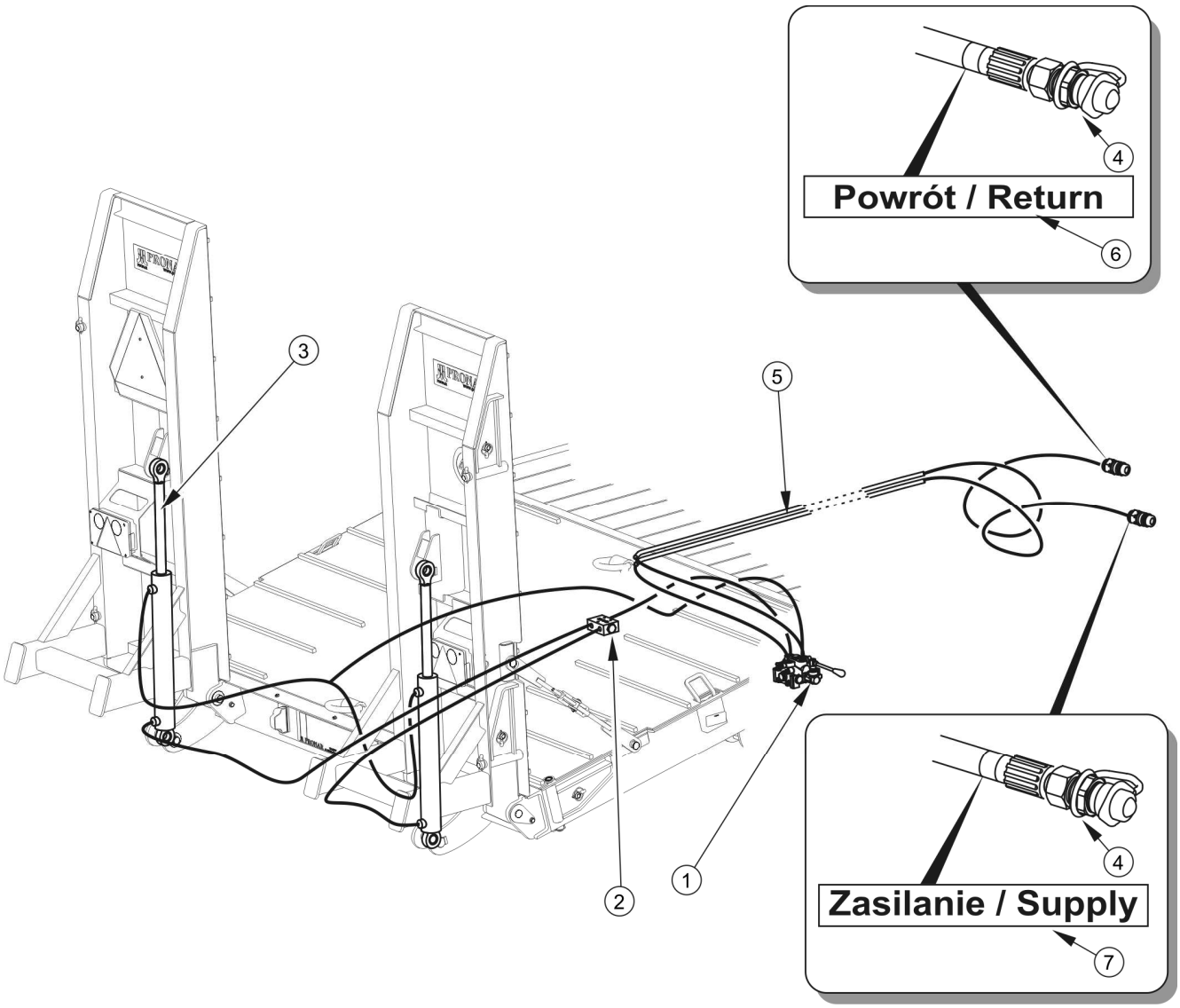


**FIG. 3.8 Design of the ramps' hydraulic system**

*(1) hydraulic selective control valve, (2) flow divider, (3) cylinder, (4) hydraulic coupler, (5) hydraulic pipes, (6) information decal, (7) information decal*

Design of the hydraulic system for folding and unfolding the ramps is shown in Figure (*3.8*) and on concept diagram – Figure (*3.9*).

The ramps are operated (raised and lowered) by means of double acting cylinders, through hydraulic selective control valve (1). Hydraulic selective control valve (1) is located in the rear part of the frame, on the right side of the trailer. The system is supplied from the external hydraulic system of the tractor. Oil supply conduit and return conduit are marked with information decals (6) and (7), which define proper flow of working medium in the system.

**IMPORTANT!**

**Before unfolding the ramps, first loosen and then remove ramps' interlocks.**

**Towing the trailer without installed and properly tightened interlocks is forbidden.**

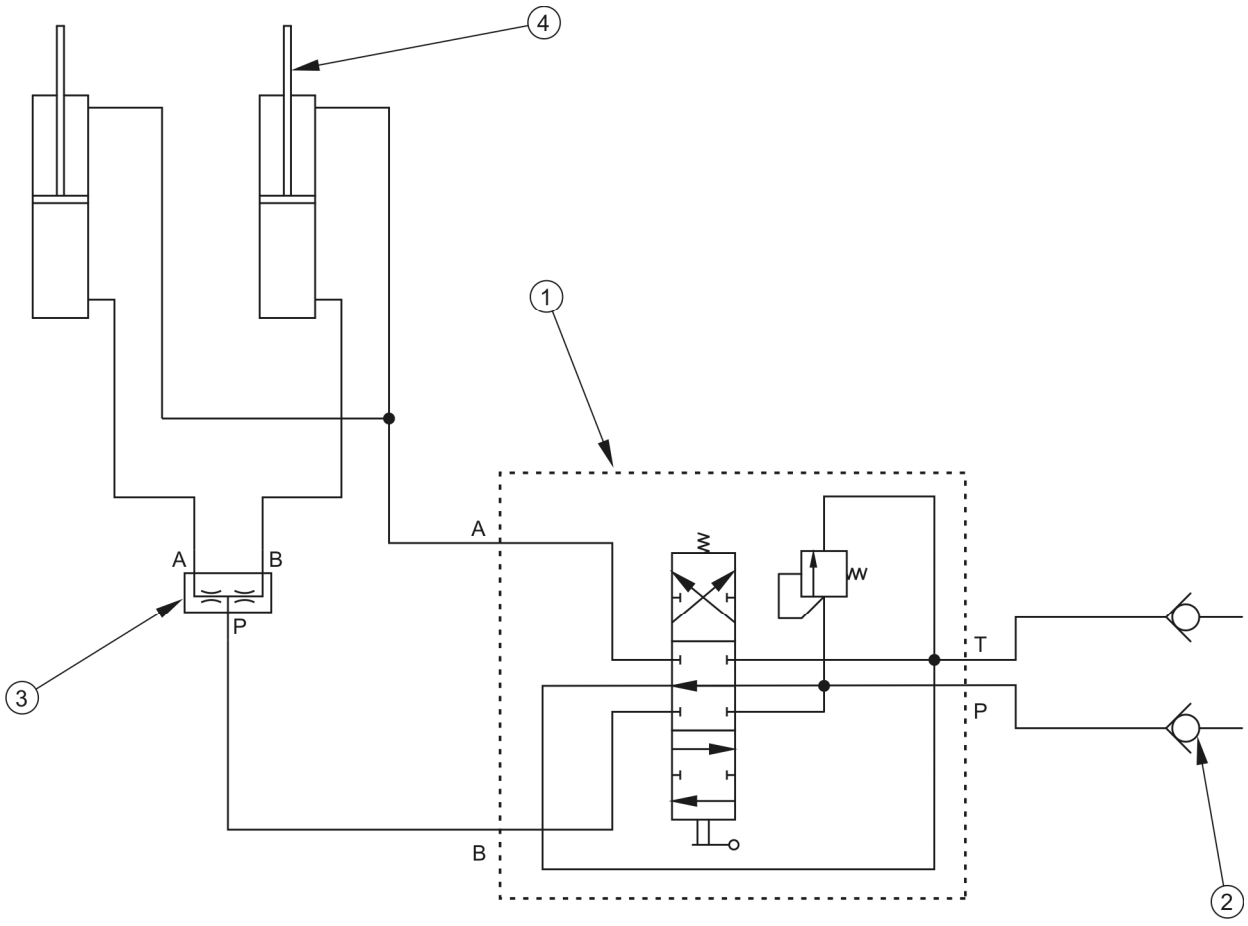


**FIG. 3.9 Concept diagram of the ramps' hydraulic system**

*(1) hydraulic selective control valve, (2) connection, (3) flow divider, (4) ramp hydraulic cylinder*

## 3.2.7 SUPPORT HYDRAULIC SYSTEM

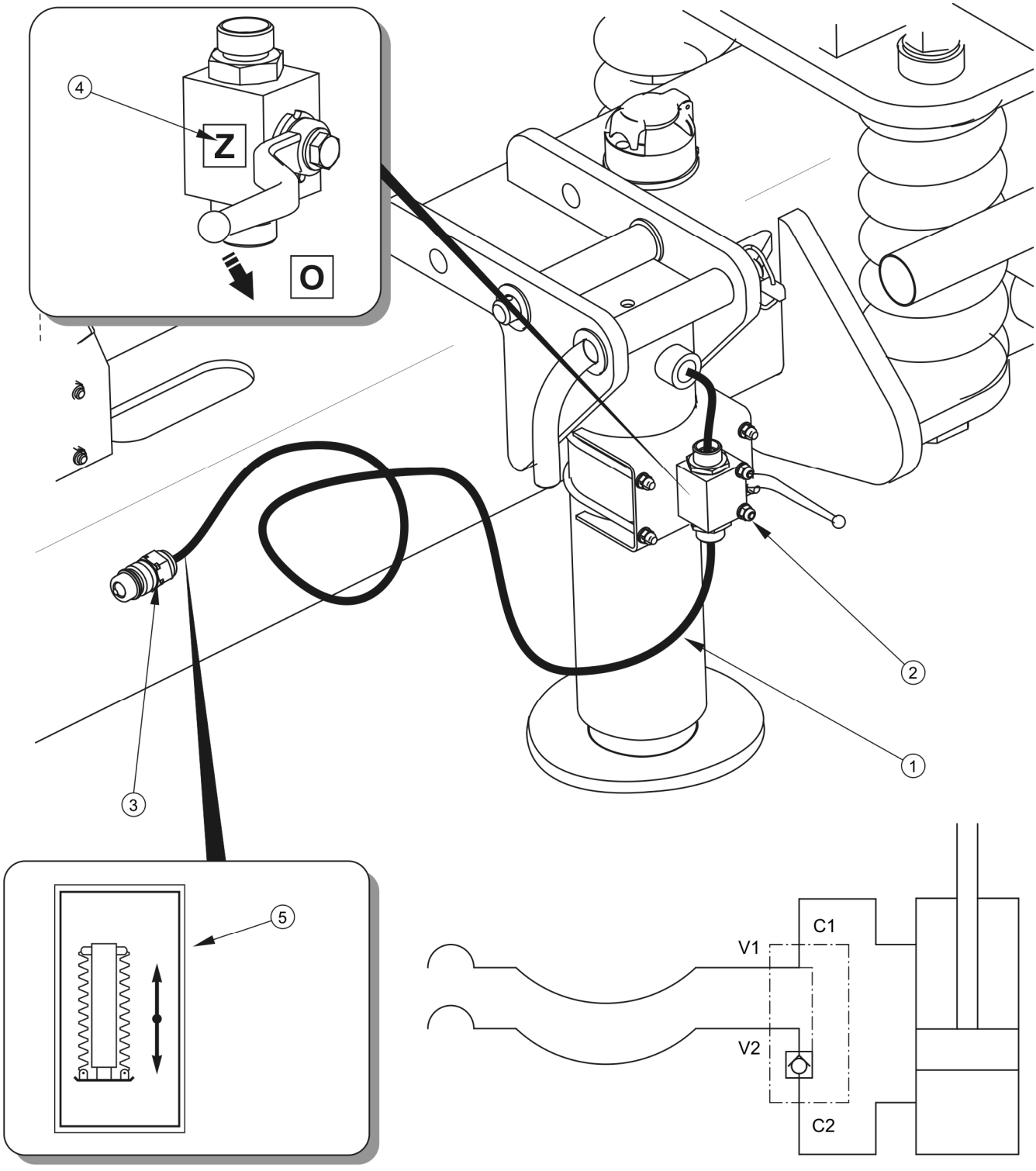


**FIG. 3.10 Design and diagram of the support hydraulic system**

*(1) straight hydraulic support, (2) cut off valve, (3) hydraulic coupler, (4) information decal, (5) information decal*

Design of the control system for the hydraulic support is shown in Figure (*3.9*). The hydraulic system is equipped with a support with a single acting cylinder. The support foot return is accomplished by the tensioning springs located inside the support body. Supply conduit is marked with information decal (5). The supply of hydraulic oil to the support is possible only when cut-off valve (2) is set to „O" position (open). When towing the trailer, the support must be folded to transport position and secured with a cotter pin. The cut-off valve must be set to „Z" position (closed).

### 3.2.8 LIGHTING SYSTEM

The trailer's electrical lighting system is designed to be supplied from direct current source of 12 V. The trailer's electrical system should be connected to the tractor using an appropriate connection lead that is a part of the trailer's standard equipment.

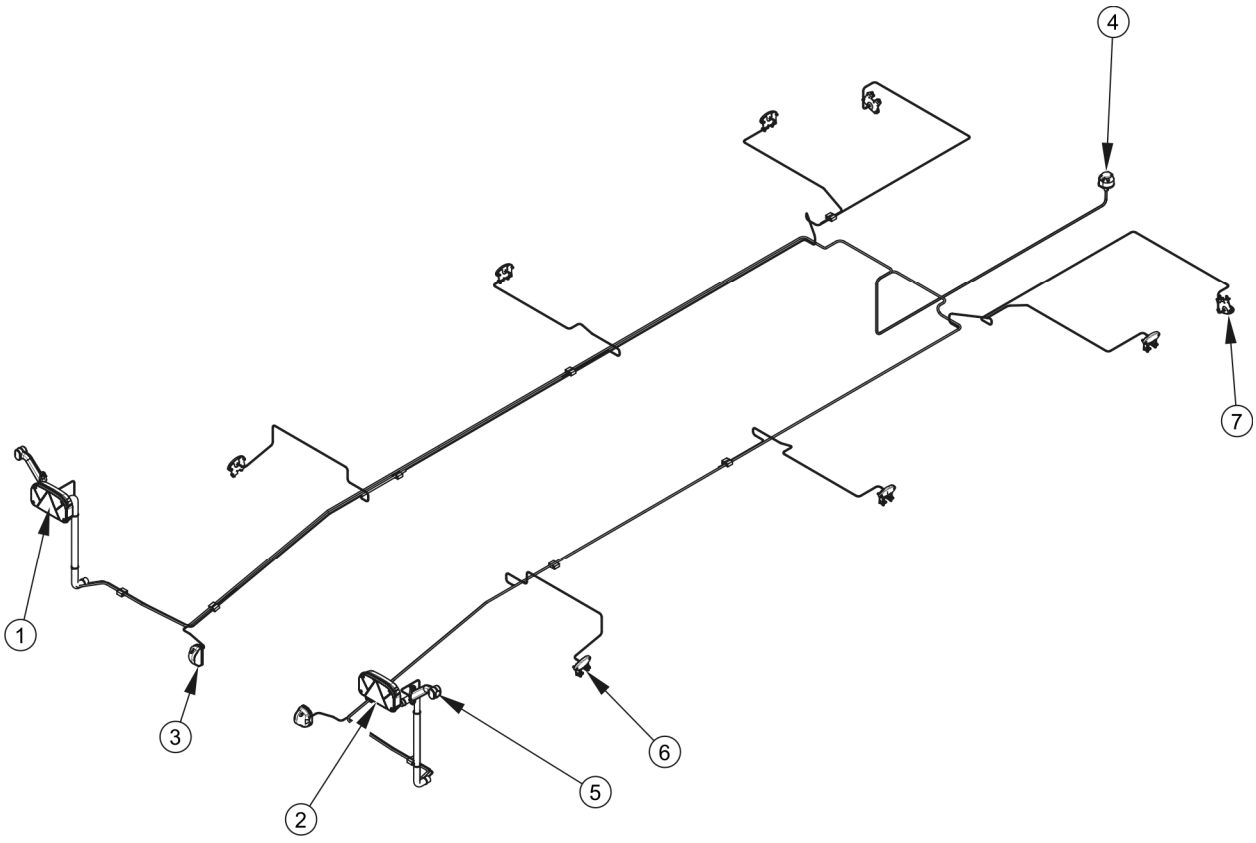


**FIG. 3.11 Electrical system design**

*(1) rear left lamp assembly, (2) rear right lamp assembly, (3) license plate light, (4) 7-pin socket, (5) rear clearance lamp, (6) side clearance lamp, (7) front parking light*

### 3.2.9 HYDRAULIC WINCH

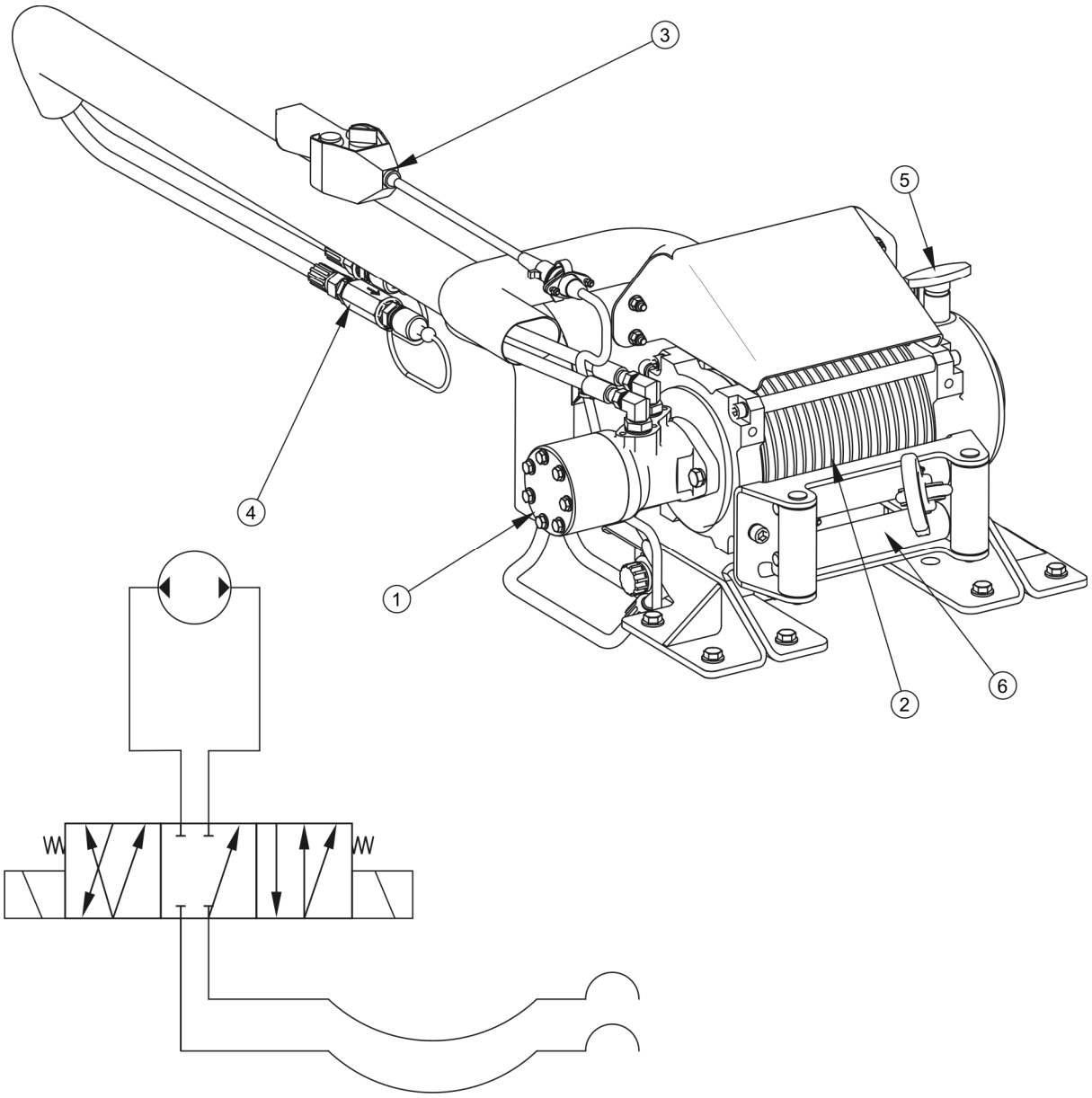


**FIG. 3.12 Design and hydraulic diagram of the hydraulic winch**

*(1) hydraulic motor, (2) winch drum, (3) electrical controller, (4) hydraulic lines, (5) releasing lever, (6) direction rollers*

Winch design is shown in Figure (*3.12*). The subassembly is mounted on the load platform planks behind the chassis front wall. The winch facilitates loading of damaged machines and machines without driving system. Hydraulic motor (1) connected with the winch drum (2) is supplied from the external hydraulic system of the tractor. Steel rope ended with a hook is wound around the drum. The steel rope is routed between vertical and horizontal direction

rollers (6). Hydraulic motor operation is controlled by electrical controller (3) or wirelessly, using a remote control. On the right side of the drum, there is lever (5), whose task is to disconnect drive from the drum in order to unwind the rope without the use of the motor.

*SECTION*

# 4

# CORRECT USE

# 4.1 PREPARING FOR WORK BEFORE FIRST USE

## 4.1.1 CHECKING THE TRAILER AFTER DELIVERY

The manufacturer guarantees that the trailer is fully operational and has been checked according to quality control procedures and is ready for normal use. This does not release the user from an obligation to check the machine's condition after delivery and before first use. The machine is delivered to the user completely assembled.

Before commencing work, machine operator must inspect the technical condition of the trailer and prepare it for test start-up. The user must carefully read this Operator's Manual and observe all recommendations, understand the design and the principle of machine operation.

**IMPORTANT!**

**Before proceeding to hitching to tractor the user must carefully read this Operator's Manual and additional publications attached to machine and observe all recommendations.**

**External inspection**

- Check completeness of machine (standard and optional equipment).
- Check condition of protective paint coat and load platform planks.
- Inspect trailer's individual components for mechanical damage resulting from incorrect transport (dents, piercing, bent or broken components).
- Check technical condition of tyres and tyre pressure.
- Check technical condition of elastic hydraulic lines,
- Check technical condition of pneumatic conduits,
- Check that there are no hydraulic oil leaks.
- Check electric lamps.

## 4.1.2 PREPARE A TRAILER FOR FIRST HITCHING TO TRACTOR

**Preparation**

- ➡ Check all the trailer's lubrication points, lubricate the machine as needed according to recommendations provided in section 5.
- ➡ Check if the nuts and bolts fixing the wheels are properly tightened.
- ➡ Drain air tank of the brake system.
- ➡ Ensure that pneumatic, hydraulic and electric connections in agricultural tractor are according to the requirements, if not the trailer should not be hitched to the tractor.
- ➡ Adjust the height of the drawbar setting or location of higher transport hitch.
    - ⇨ a detailed description can be found in section 5.

**Test drive**

If all the above checks have been performed and there is no doubt as to the trailer's good technical condition, it can be connected to tractor. Start the tractor, check all systems and conduct test run of trailer without load (no load in load box). It is recommended that the inspection is conducted by two people, one of which should always remain in the tractor cab. Test start should be conducted according to the sequence shown below.

- ➡ Connect trailer to appropriate hitch on agricultural tractor.
- ➡ Connect brake, electrical and hydraulic system lines.
- ➡ Switch on individual lights, check correct operation of electrical system.
- ➡ Check if the ramps' hydraulic system and the hydraulic winch operate correctly.
- ➡ When moving off check if the main brakes operate correctly.
- ➡ Perform test drive.

If during test run worrying symptoms occur such as:

- noise and abnormal sounds originating from the abrasion of moving elements of the trailer design,
- hydraulic oil leak,

- pressure drop in brake system,
- incorrect operation of hydraulic and/or pneumatic cylinders

or other faults, find the cause of the problem. If a fault cannot be rectified or the repair could void the guarantee, please contact retailer for additional clarifications or to perform repair.

**DANGER**

**Careless and improper use and operation of the trailer, and non-compliance with the recommendations given in this operator's manual is dangerous to your health.**

**The trailer must never be used by persons, who are not authorised to drive agricultural tractors, including children and people under the influence of alcohol or other drugs.**

**Non-compliance with the safety rules of this Operator's Manual can be dangerous to the health and life of the operator and others.**

After completion of test drive check tightness of wheel nuts.

**TIP**

**Service operation: hitching to/unhitching from tractor, adjustment of drawbar position, use of ramps and use of winch etc. are described in detail further in the Operator's Manual in sections 4 and 5.**

# 4.2 HITCHING AND DISCONNECTING FROM TRACTOR

Ensure that all connections (electric, pneumatic, hydraulic) and the hitch of agricultural tractor meet the requirements of the low chassis trailer Manufacturer. Otherwise, the trailer should not be hitched to the tractor.

In order to hitch the trailer to the tractor perform the actions below in the sequence presented. Machine must be immobilised by parking brake.

**Connection**

➡ Immobilise trailer with parking brake.

➡ Position agricultural tractor directly in front of drawbar eye.

- ➡ Connect the line marked with decal (7), Figure (*4.1*), to socket in tractor – supply of the support's hydraulic system.
- ➡ Set hydraulic valve (5) to „O” position.
- ➡ Adjust the height of the drawbar with regard to the tractor hitch using selective control valve of the tractor's hydraulic system (by lowering or sliding the support foot).
- ➡ Reverse tractor, hitch trailer to appropriate hitch on tractor, check hitch lock protecting machine against accidental unhitching.
- ➡ Raise support foot, turn it to transport position and secure it with pin.
    - ⇨ Read subsection *(4.3)*.
- ➡ Set hydraulic valve (5) to „Z” position.
- ➡ Turn off tractor ignition. Ensure that unauthorised persons do not have access to the tractor cab.
- ➡ Connect pneumatic system lines (standard equipment):
    - ⇨ Connect pneumatic line marked yellow with yellow socket in tractor.
    - ⇨ Connect pneumatic line marked red with red socket in tractor.
- ➡ Connect hydraulic brake system lines (optional equipment, interchangeable with pneumatic system):
- ➡ Connect main line supplying electric lighting system.
- ➡ Connect hydraulic ramp control system lines (optional equipment)
    - ⇨ Ramp control system lines are marked with decals which indicate correct direction of oil flow in the system.
- ➡ Connect hydraulic system lines of hydraulic winch (optional equipment)
    - ⇨ Line with mounted return valve should be connected to socket "slow pouring” by-passing hydraulic selective control valve.

When connecting the pneumatic brake system lines, it is very important to ensure the correct sequence of line connection. First in sequence connect yellow coloured plug to yellow socket in tractor, and then afterwards the red coloured plug to the red socket in tractor. Once the 2nd line is connected, the braking system will switch to normal mode of operation

(disconnection or interruption of the conduits causes the trailer's braking system control valve to automatically apply brakes).

**IMPORTANT!**

**Low chassis trailer may only be hitched to a tractor which has the appropriate connection sockets for brake system, hydraulic system and electrical system. Hydraulic oil in both machines must be of the same type and the tractor hitch must be capable of withstanding the drawbar's vertical load of correctly loaded trailer.**

**DANGER**

**When hitching, there must be nobody between the trailer and the tractor. When hitching the machine, tractor driver must exercise caution and make sure that nobody is present in the hazard zone.**

**Be especially careful when hitching the machine to tractor.**

**When connecting the hydraulic lines to the tractor, make sure that the tractor hydraulic system and trailer are not under pressure.**

**IMPORTANT!**

**When hitching is completed, secure the electrical leads and hydraulic and braking system lines in such a way that they do not become entangled in tractor's moving parts and are not at the risk of breaking or severed when making turns.**

### Disconnecting the trailer

In order to disconnect the trailer from the tractor carry out the following actions in the following sequence:

- ➡ Immobilise tractor and trailer with parking brake.
- ➡ Lower the support to rest position.
  - ⇨ Read subsection *(4.3)*.
- ➡ Turn off tractor ignition. Ensure that unauthorised persons do not have access to the tractor cab.
- ➡ Disconnect hydraulic system lines of the support, hydraulic winch and ramps from the tractor.

- ➡ Disconnect electric lead.
- ➡ Disconnect pneumatic system lines.
  - ⇨ Disconnect pneumatic line marked red.
  - ⇨ Disconnect pneumatic line marked yellow.
- ➡ Protect ends of hydraulic and pneumatic lines with covers. Place line terminals in appropriate sockets in the bracket located on the trailer drawbar.
- ➡ Disconnect drawbar from the tractor's hitch and move the tractor forward.
- ➡ Place chocks under trailer wheel.
  - ⇨ Wheel chocks shall be so placed that one of them is in front of the wheel and the second is behind it.

**DANGER**

**Exercise caution when disconnecting trailer from the tractor. Ensure good visibility. Unless it is necessary, do not go between tractor and trailer.**

**Before disconnecting conduits and drawbar eye, close tractor cab and secure it against access by unauthorised persons.**

# 4.3 TRAILER SUPPORT OPERATION

**Setting the support to driving position**

- ➡ Immobilise tractor and trailer with parking brake.
- ➡ Open valve (5).
  - ⇨ Shift valve lever in the direction of „O” – decal (6).
- ➡ Operate selective control valve in the tractor in order to raise the support foot.
  - ⇨ The tractor must be connected with the trailer before the support foot is raised.
  - ⇨ Hydraulic line marked with decal (7) – figure (*4.1*) must be connected to the tractor hydraulic socket. The trailer must be hitched to the tractor.

➡ Close valve (5).

⇨ Shift valve lever to „Z” position – decal (6).

➡ Remove R-clip (4) from safety pin, remove safety pin (3).

➡ Turn support foot to position (2).

➡ Insert safety pin (3) to socket (B) and secure it with R-clip (4).

➡ Prior to moving off, release trailer's parking brake.

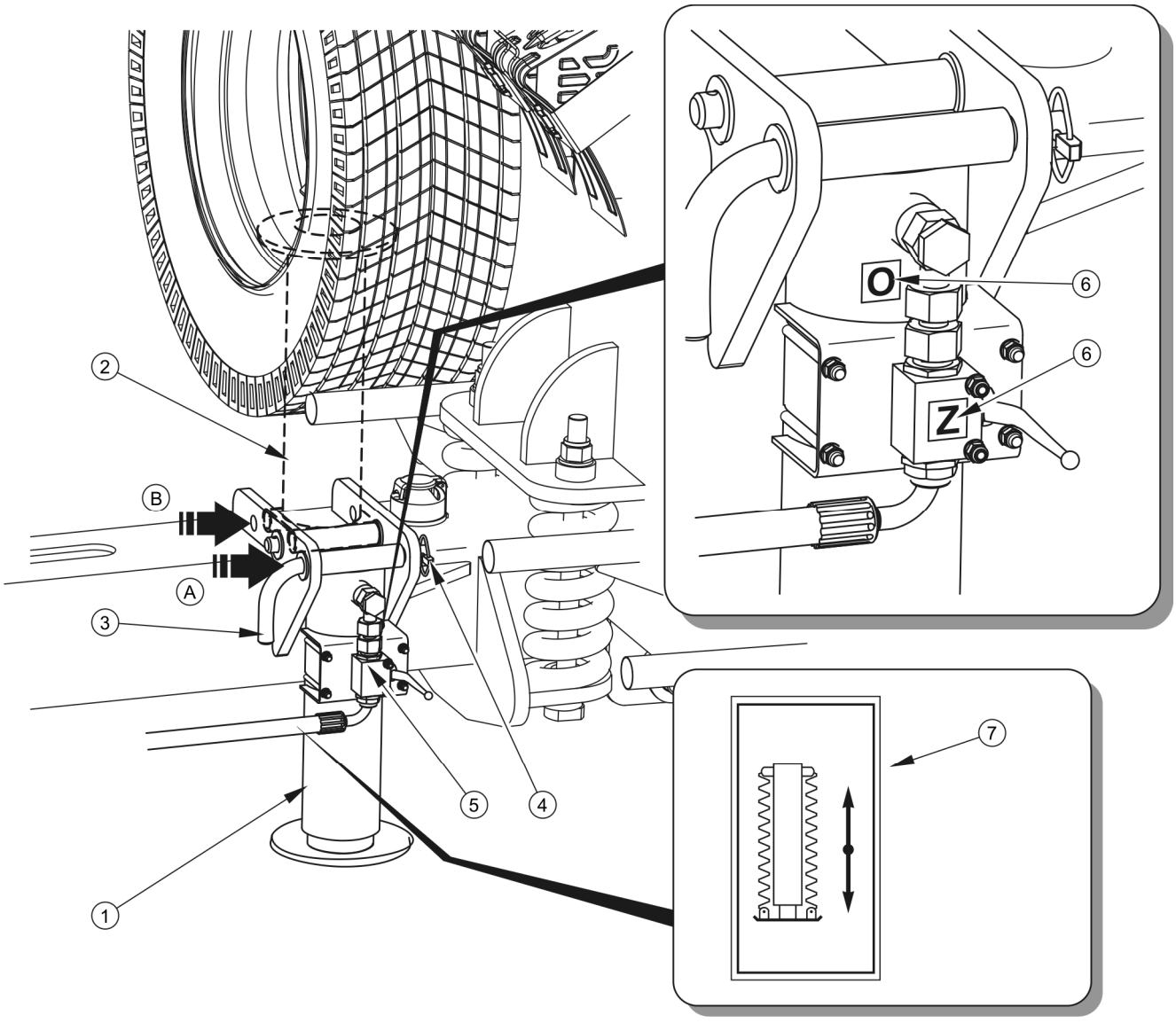


**FIG. 4.1 Trailer support operation**

*(1) support in parking position, (2) support in driving position, (3) safety pin, (4) R-clip of safety pin, (5) cut off valve, (6) information decal „O/Z”, (7) information decal, (A), (B) safety pin sockets*

## DANGER

**While placing the support in driving position, exercise caution and do not place fingers between the support mounting socket and the support. Danger of severing or crushing.**

## IMPORTANT!

**Do NOT move off or drive with the support raised only by means of the hydraulic cylinder. The support must be set to driving position.**

**Do NOT travel with the trailer if the support securing elements are damaged or lost – safety pin (3) and R-clip (4).**

### Setting the support to rest position

- Immobilise tractor and trailer with parking brake.
- Remove R-clip (4) from safety pin (3) – Figure (*4.1*).
- Turn the support to position (1) – parking position.
- Insert safety pin (3) to socket (A) and secure it with R-clip (4).
- Set cut off valve (5) to „O" position.
- Operate selective control valve in the tractor in order to lower the support foot.
  - ⇨ Drawbar hitching eye should be slightly raised with regard to the tractor hitch in order to facilitate unhitching the trailer.
- Set valve (5) to „Z" position.

## DANGER

**Danger of crushing. Be especially careful when lowering the support – this refers to bystanders or helpers.**

# 4.4 LOADING AND UNLOADING THE TRAILER

## 4.4.1 STANDARD SIZE LOADS

Standard size loads are all loads permitted for transport, whose dimensions do not exceed allowable dimensions specified by the road traffic regulations in force in the country where the trailer is used. Load must not extend beyond the outline of the load platform.

Loading of trailer may only take place when the machine is hitched to tractor. The load must be arranged in such a manner that it does not overload the axle or hitch system of the tractor and trailer.

**DANGER**

**Do NOT exceed the trailer's maximum carrying capacity.**

**People or animals and loads not permitted by the Manufacturer must not be carried on the trailer.**

**Loading the trailer**

- Tractor and trailer must be placed to drive forwards.
- Immobilise tractor and trailer with parking brake.
- Switch off tractor engine, secure cab to prevent unauthorised access.
- Loosen tensioning bolts of the ramps' interlocks and remove interlocks.
  - ⇨ See Figure (*4.4*)
- Take out locking pins and lower the ramps to the ground (manually or using hydraulic system selective control valve – depending on trailer equipment).
- Place the load on the trailer platform.
- Fold the ramps using hydraulic system selective control valve.
- Install the ramps' interlocks, tighten the interlocks using tensioning bolts.
- Secure the load.

**IMPORTANT!**

**Lower the ramps until they fully rest on the ground. Otherwise, when a machine is driven onto the load platform, the trailer will have a tendency to raise the drawbar, which may cause damage to the tractor hitch or drawbar.**

Hoisting crane or overhead crane of proper lifting capacity or additional agricultural tractor may be used for loading the trailer.

When using a tractor for loading the trailer, remember to ensure that the gross weight (tractor + loaded machine) does not exceed the trailer's maximum carrying capacity. Otherwise, the ramps, drawbar or other elements of the low chassis trailer may get damaged.

Before loading, ensure enough space and very good visibility.

**DANGER**

**Do NOT stand within the danger zone, i.e. keep a distance of approximately 5 meters from each side of the trailer.**

If loading takes place on soft or muddy ground, place thick planks, strong plates or other materials under the ramps to prevent them from sinking into the ground.

**IMPORTANT!**

**Unfolded ramps must be at the same height. Do not place the ramps in such a manner that one of the ramps is supported on an obstacle (e.g. stone, curb etc.).**

### 4.4.2 OVERSIZE LOADS

Oversize loads are the loads whose dimensions exceed allowable dimensions specified by the road traffic regulations in force in the country where the trailer is used.

Oversize loads may be transported on public roads only if the requirements specified by the road traffic regulations are met and a travel permit is obtained from a competent office. Driving on non-public roads is not limited by road traffic regulations.

## DANGER

**Do NOT exceed the trailer's maximum carrying capacity.**

**People or animals and loads not permitted by the Manufacturer must not be carried on the trailer.**

### Loading the trailer

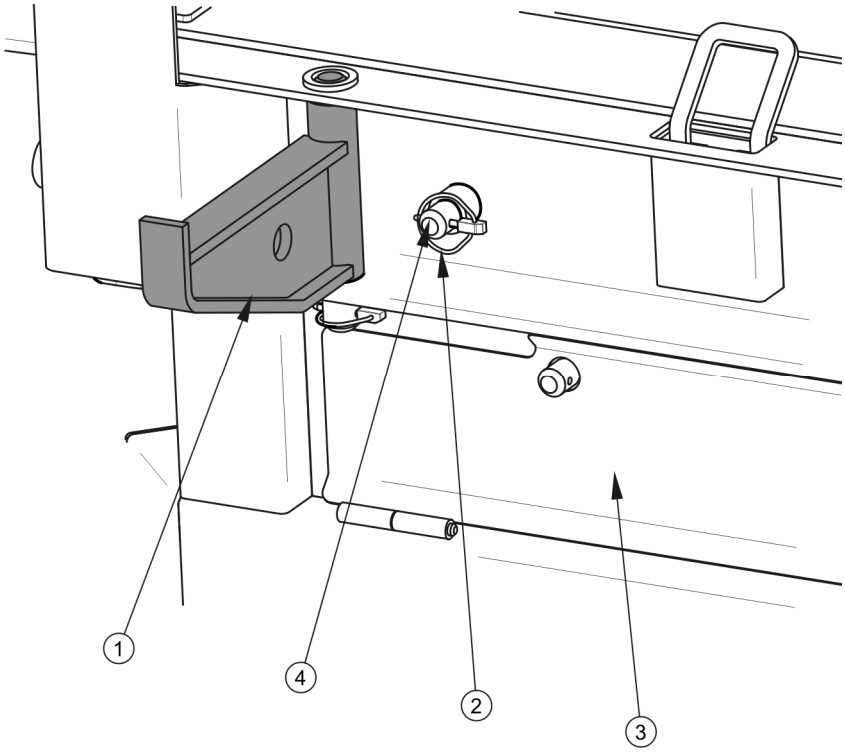


**FIG. 4.2 Extension bracket**

*(1) extension bracket, (2) bracket securing cotter pin, (3) cover of holder for spare planks, (4) pin of extension lock*

- Tractor and trailer must be placed to drive forwards.
- Immobilise tractor and trailer with parking brake.
- Switch off tractor engine, secure the cab to prevent unauthorised access.
- Loosen tensioning bolts of the ramps' interlocks and remove interlocks.
- Take out locking pins and lower the ramps to the ground (manually or using hydraulic system selective control valve – depending on trailer equipment).

- Take out cotter pins (2) securing extension brackets (1).
  - ⇨ In order to prevent loss of cotter pins, insert them again into the openings of locking pins (4), after unfolding the brackets.
- Take out additional planks from the holder for spare planks and arrange them evenly on extension brackets.
- Place the load on the trailer platform.
- Fold the ramps using hydraulic system selective control valve.
- Install the ramps' interlocks, tighten the interlocks using bolts.
- Secure the load.

**IMPORTANT!**

**Lower the ramps until they fully rest on the ground. Otherwise, when a machine is driven onto the load platform, the trailer will have a tendency to raise the drawbar, which may cause damage to the tractor hitch or drawbar.**

Oversize load may not fully load the floor extension elements. Wheels, brackets, supports or other load elements, item (1) Figure (*4.3*), which carry the machine load, must be arranged in such a manner as to ensure that at least a half of the element is supported on a fixed section of the load platform (planks (5) and extreme longitudinal member of the low chassis trailer (2)).

**IMPORTANT!**

**Unfolded ramps must be at the same height. Do not place the ramps in such a manner that one of the ramps is supported on an obstacle (e.g. stone, curb etc.).**

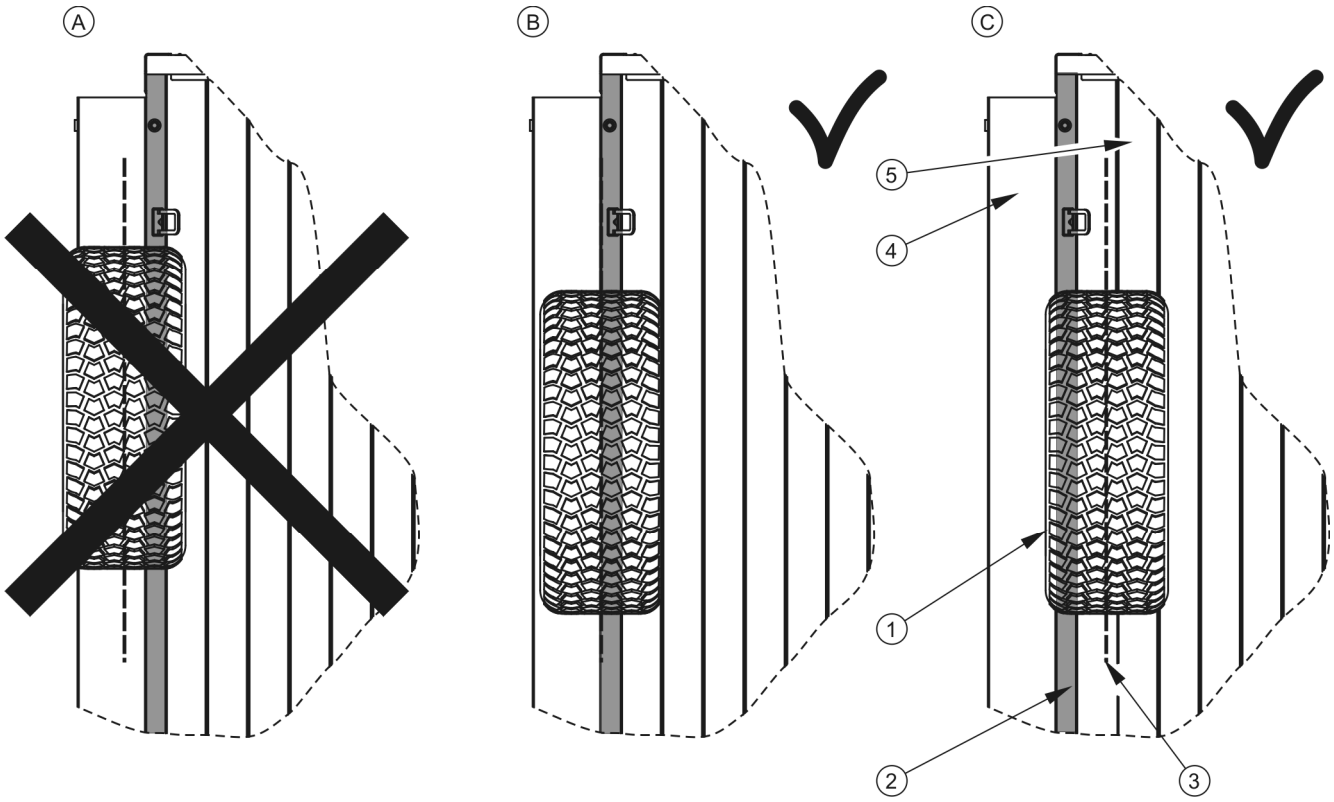


**FIG. 4.3 Position of load on extension planks**

*(1) wheel of transported trailer, (2) extreme longitudinal member of the low chassis trailer, (3) symmetry axis of the transported trailer's wheel, (4) extension plank, (5) load platform, (A) forbidden position, (B)- (C) allowed position*

## DANGER

**Do NOT stand within the danger zone, i.e. keep a distance of approximately 5 meters from each side of the trailer.**

## IMPORTANT!

**During transport of oversize load, all brackets and additional planks must be unfolded.**

### 4.4.3 UNLOADING THE TRAILER

- ➡ Tractor and trailer must be placed to drive forwards.
  - ⇨ Ensure enough space for unloading.
- ➡ Remove ramps' interlocks, lower the ramps to the ground.
- ➡ Switch off tractor engine, secure the cab to prevent unauthorised access.
- ➡ Remove all load fastening devices.
- ➡ Unload the trailer using overhead crane, hoisting crane or another tractor.

**IMPORTANT!**

**Lower the ramps until they fully rest on the ground. Otherwise, when a machine is driven off the load platform, the trailer will have a tendency to raise the drawbar, which may cause damage to the tractor hitch or drawbar.**

**If unloading takes place on soft ground, place planks, plates or other materials under the ramps to prevent them from sinking into the ground.**

## 4.5 RAMPS' PROTECTIONS

### 4.5.1 RAMPS' INTERLOCK

**IMPORTANT!**

**If ramps' interlocks are installed on pins, position of ramps must not be adjusted (pins or interlocks may get damaged).**

**Dismounting the interlock**

- ➡ Move the lock (3) of double ended bolt.
- ➡ Unfold lever.
- ➡ Part the lugs of bolt (4) by turning nut (2) with a lever.
- ➡ Dismount the interlock.

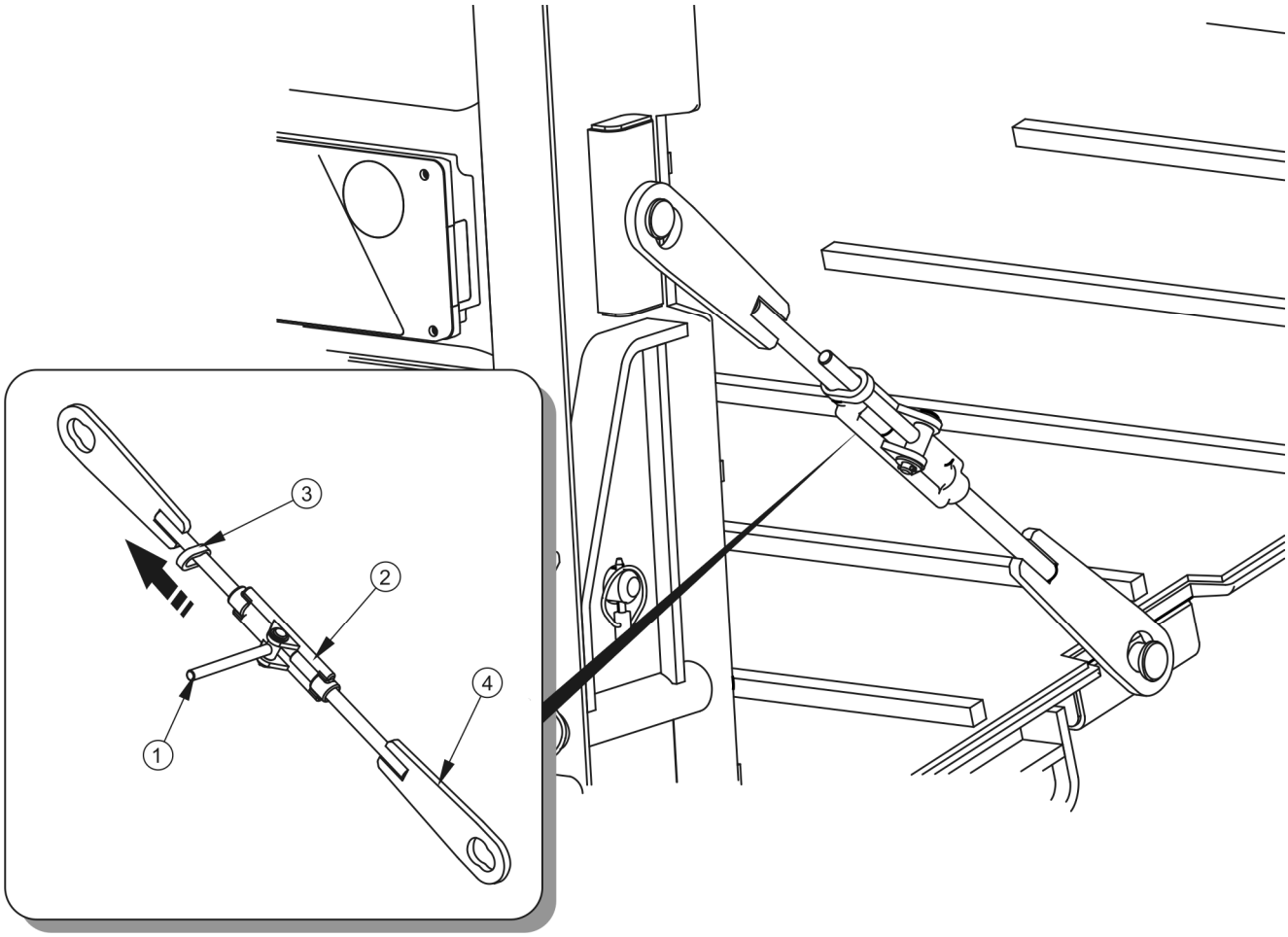


**FIG. 4.4 Ramps' interlock**

*(1) interlock lever, (2) nut of double ended bolt, (3) lock, (4) bolt lug*

**Mounting the interlock**

- ➡ Install the interlock on frame and ramp pins.
  - ⇨ If ramps are not fully folded, correct their position by means of selective control valve.
  - ⇨ Ramps' interlocks must be positioned in such a manner as to ensure that locks (3) are located over the nut. Otherwise, the lock will slide off during travel.
- ➡ Tighten the ramps' interlocks by turning nut with lever (2).
- ➡ Fold the lever and secure it by means of lock (3).

### 4.5.2 SPRING CATCH

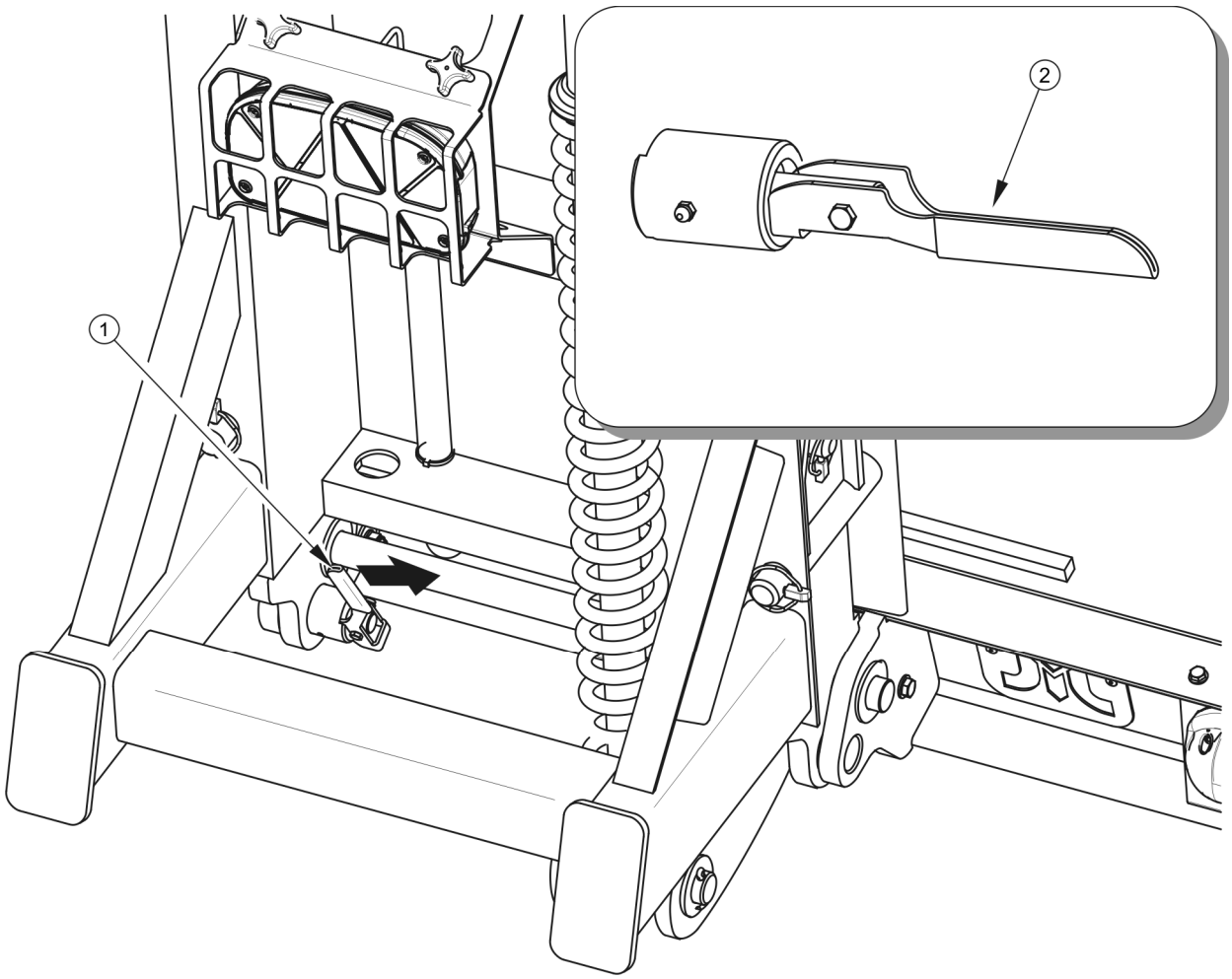


**FIG. 4.5 Spring catch**

*(1) catch lever in ramp locking position, (2) catch lever in ramp releasing position*

Spring catches (1) Figure (*4.5*) are mounted near the ramp rotation pin. Pull out the lever to position (2) in order to release the catch. In this position, the catch lever can not be automatically closed. After releasing the interlock, the ramps can be lowered to working position.

**IMPORTANT!**

**After finishing ramps folding, make sure that spring catches are in locking position.**

After finishing work and folding the ramps, check whether the spring catches have automatically returned to locking position. Otherwise, set the levers to correct position - position (1) – Figure (*4.5*).

# 4.6 OPERATION OF HYDRAULIC WINCH

## 4.6.1 USE OF HYDRAULIC WINCH

**DANGER**

**Do NOT use out of order hydraulic winch.**

- ➡ Pull the release lever up.
- ➡ Extend the winch rope along the load platform and attach the winch hook to load fixing lug.
- ➡ Press the lever.
- ➡ Tighten the winch rope preliminarily by means of hydraulic controller, by winding the rope around the drum.
- ➡ Check if the hook is correctly attached.
- ➡ Pull the load onto the trailer platform.

## 4.6.2 GENERAL PRINCIPLES OF SAFE OPERATION OF THE WINCH

- Before operating the winch, immobilise tractor and trailer with parking brake. It is additionally recommended that chocks should be placed under the trailer wheel.
- Do NOT use additional accessories to extend the winch rope.
- Do NOT unwind the rope to its full length. At least 5 rope fakes must remain on the drum.
- Do NOT go under and over the rope during winch operation.
- Do NOT stand between the winch and pulled load.
- Do NOT use the winch if hydraulic system is leaking.

- The winch is not equipped with locking mechanism. The load pulled onto the trailer should be properly secured.
- Keep a safe distance from rope and pulled load during winch operation.
- Do NOT move the tractor and trailer if the winch rope is extended and attached to the load located outside the trailer.
- Do NOT wear loose clothing, straps or whatever that may become wrapped round the rotating winch drum.
- The winch must not be operated by children and people under the influence of alcohol.
- If the winch is not used, secure it in such a manner as to prevent its activation by unauthorized persons
- Before starting work, check technical condition of the machine. First of all, check technical condition of hook and confirm that it is correctly attached to towing rope.

# 4.7 SECURING LOAD

Regardless of the type of load carried, the user is obliged to secure it in such a manner that the load is unable to move freely on the load platform and pose a threat to other road users during transport.

Securing the load involves its correct attaching to load platform by means of belts, ropes, chains or other devices equipped with a tensioning mechanism. Information provided in this section do not describe all possibilities of load securing. Important instructions are only given concerning correct load fixing methods and risks are indicated which may occur if proper procedures are not followed.

Properly secured load must not have a tendency to tilt on the load platform when making turns and must not slide on the trailer floor planks. For this reason, sufficient securing measures should be applied to prevent these unfavourable phenomena. It is additionally recommended that chocks or other objects without sharp edges should be placed under the load wheels (if the load has wheels) in order to prevent load relocation.

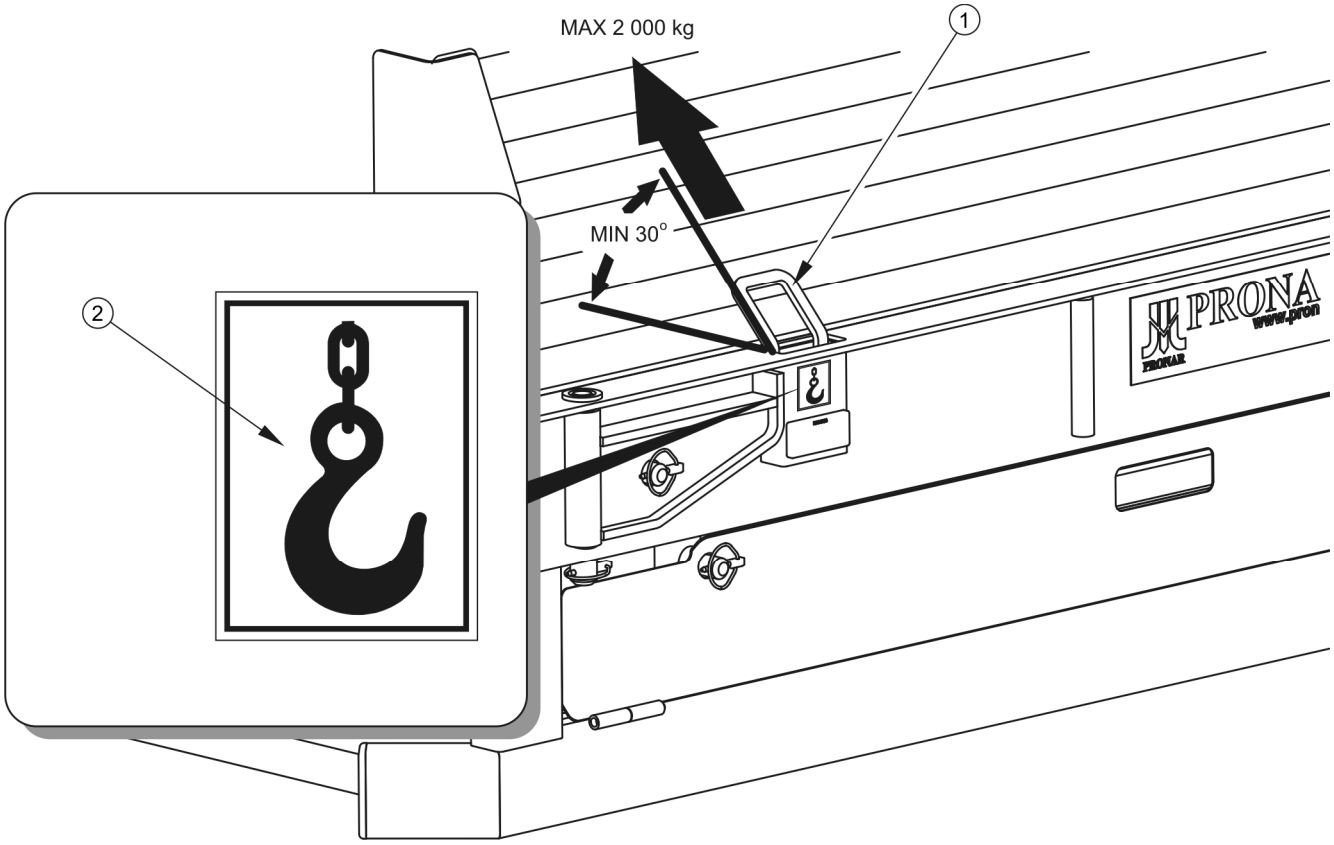


**FIG. 4.6 Permitted parameters of extreme fixing lug**

*(1) extreme fixing lug, (2) information decal*

Low chassis trailer is equipped with two types of fixing lugs. On extreme longitudinal members, there are 5 pairs of external fixing lugs, Figure (4.5), whose maximum load must not exceed 2,000 kg. The optimum angle for attaching securing measures is $30^0$ – see Figure (*4.6*). Increased load applied to fixing lug or wrong attaching angle may cause damage to fixing lug and lead to relocation of load.

**DANGER**

**Do NOT exceed the maximum load of external fixing lugs.**

3 additional fixing lugs are installed on the symmetry plane of the load platform. The maximum load of these fixing lugs is 20,000 kg.

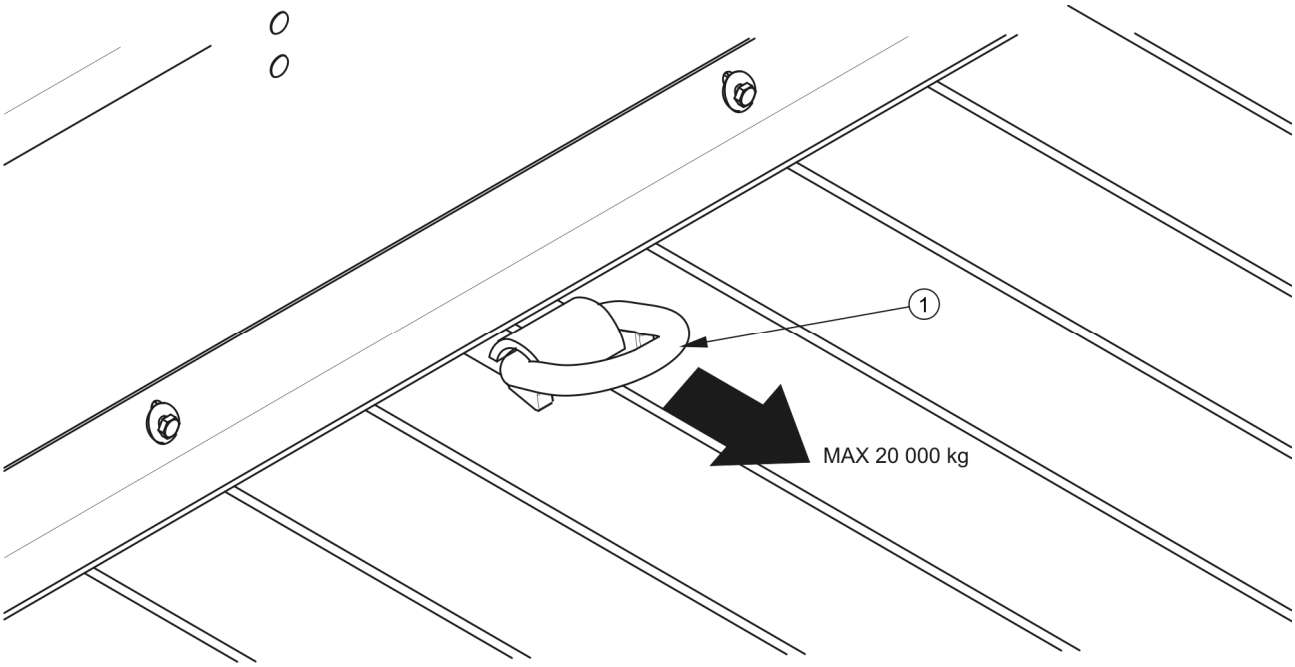


**FIG. 4.7 Middle load fixing lug**

*(1) fixing lug*

**DANGER**

**Do NOT exceed the maximum load of middle fixing lugs.**

# 4.8 TRANSPORTING THE MACHINE

When driving on public or private roads, respect the road traffic regulations, exercise caution and prudence. Listed below are the key guidelines for driving the tractor and trailer combination.

- Before moving off make sure that there are no bystanders, especially children, near the trailer or the tractor. Take care that the driver has sufficient visibility.
- Make sure that the ramps are correctly secured with interlocks and the support is set to transport position.
- Make sure that the trailer is correctly attached to the tractor and tractor's hitch is properly secured.

- It is recommended that another person should help in reversing or making difficult manoeuvres. This person should observe the tractor and trailer combination and the load. This person should be visible all the time to the tractor driver as well as be especially careful and keep a safe distance from danger zones.
- The trailer must not be overloaded, loads must be uniformly distributed so that the maximum permissible axle and drawbar loads are not exceeded. The trailer's maximum carrying capacity must not be exceeded as this can damage the machine and pose a threat to the operator or other road users.
- Permissible design speed and maximum speed allowed by road traffic law must not be exceeded. The towing speed should be adapted to the current road conditions, load carried by the trailer, road surface conditions and other relevant conditions.
- In the event of trailer malfunction, pull over on the hard shoulder avoiding any risk to other road users and position reflective warning triangle according to traffic regulations.
- While driving on public roads the trailer must be fitted with a certified or authorised reflective warning triangle. When driving, comply with all road traffic regulations, indicate an intention to turn using indicator lamps, keep all road lights and indicator lights clean at all times and ensure they are in good condition. Any damaged or lost lamps or indicator lights must be immediately repaired or replaced.
- Avoid ruts, depressions, ditches or driving on roadside slopes. Driving across such obstacles could cause the trailer or the tractor to suddenly tilt. This is of special importance because loaded trailer's centre of gravity is higher, which reduces safety. Driving near ditches or canals is dangerous as there is a risk of the wheels sliding down the slope or the slope collapsing.
- When driving, avoid sharp turns especially on slopes.
- Please note that the braking distance of tractor and trailer combination is substantially increased at higher speeds and loads carried in the trailer.
- Speed must be sufficiently reduced before making a turn or driving on an uneven road or a slope.

- During reversing one should use the assistance of another person, who gives directions standing clear of the danger zone.

# 4.9 PROPER USE AND MAINTENANCE OF TYRES

- When working on the tyres, chocks or other objects without sharp edges should be placed under the wheels of the trailer to prevent it from rolling. Wheels can be taken off the trailer axle only when the trailer is not loaded.
- Repair work on the wheels or tyres should be carried out by persons trained and entitled to do so. This work should be carried out using appropriate tools.
- After removing a wheel, always check how firmly the nuts are screwed in. Inspection should take place each time after first use, after first journey with a load and then every 6 months. In the event of intensive work, check the nut tightening at least every 100 km.
- During wheel dismounting, memorize the sequence of wheel and spacer ring dismounting. The smaller ring is mounted on the wheel axle drum side. The larger ring is mounted on the external side.
- Regularly check and maintain correct pressure in tyres according to Operator's Manual (especially if trailer is not used for a longer period of time).
- Pressure and tyres should be also checked after the whole day of intensive work. Please note that higher temperatures could raise tyre pressure by as much as 1 bar. At high temperatures and pressure, reduce load or speed.
- Do not release air from warm tyres to adjust the pressure or the tyres will be underinflated when temperatures return to normal.
- Protect tyre valves using suitable caps to avoid soiling.
- Do not exceed the trailer's maximum design speed.
- Avoid potholes, sudden manoeuvres or high speeds when turning.

*SECTION*

# 5

# MAINTENANCE

# 5.1 PRELIMINARY INFORMATION

When using the trailer, regular inspections of its technical condition are essential and the performance of maintenance procedures, which keep the machine in good technical condition. In connection with this the user of the trailer is obliged to perform all the maintenance and adjustment procedures defined by the Manufacturer.

Repairs during the guarantee period may only be performed by authorised service points.

Detailed procedures and extents of functions are described in this section, which the user may perform with his own resources. In the event of unauthorised repairs, changes to factory settings and other actions, which are not regarded as possible for the trailer operator to perform, the user shall invalidate the guarantee.

# 5.2 SERVICING BRAKES AND AXLES

## 5.2.1 PRELIMINARY INFORMATION

Work connected with the repair, change or regeneration of axle and brakes elements should be entrusted to specialist establishments, having the appropriate technology and qualifications for this type of work.

The responsibilities of the user are limited to:

- initial inspection of axle brakes,
- inspection and adjustment of loose play of axle bearings,
- mounting and dismounting wheel, inspection of wheel tightening,
- checking air pressure, evaluating technical condition of wheels and tyres,
- mechanical brakes adjustment,
- Replacing the parking brake cable and tension adjustment

Procedures connected with:

- changing grease in axle bearings,
- changing bearings, hub seals,
- changing brake linings, repairing brake,

may be performed by specialist workshops.

**DANGER**

**Do NOT use the trailer when brake system is unreliable.**

### 5.2.2 INITIAL INSPECTION OF AXLE BRAKES

After purchasing trailer, the user is responsible for general checking of brake system of trailer axle.

**Initial inspection of axle brakes must be conducted:**

- **after first use,**
- **after first travel with load.**

**INSPECTION PROCEDURES**

- ➡ Hitch trailer to tractor and place chocks under trailer wheel.
- ➡ Engage and release in turn the main brake and then the trailer parking brake.
  - ⇨ Main brake and parking brake should be engaged and released without great resistance and severity.
- ➡ Check means of securing cylinder and return springs.
- ➡ Check cylinder movement and correct return of piston to start position.
  - ⇨ The help of a second person is required, who shall engage trailer brake.
- ➡ Check if axle elements are in place, (cotter pins in castellated nuts, expansion rings etc.).
- ➡ Check hydraulic cylinders or pneumatic cylinders for tightness - compare sections 5.3.2 and 5.4.2.

## 5.2.3 CHECK WHEEL AXLE BEARINGS FOR LOOSENESS

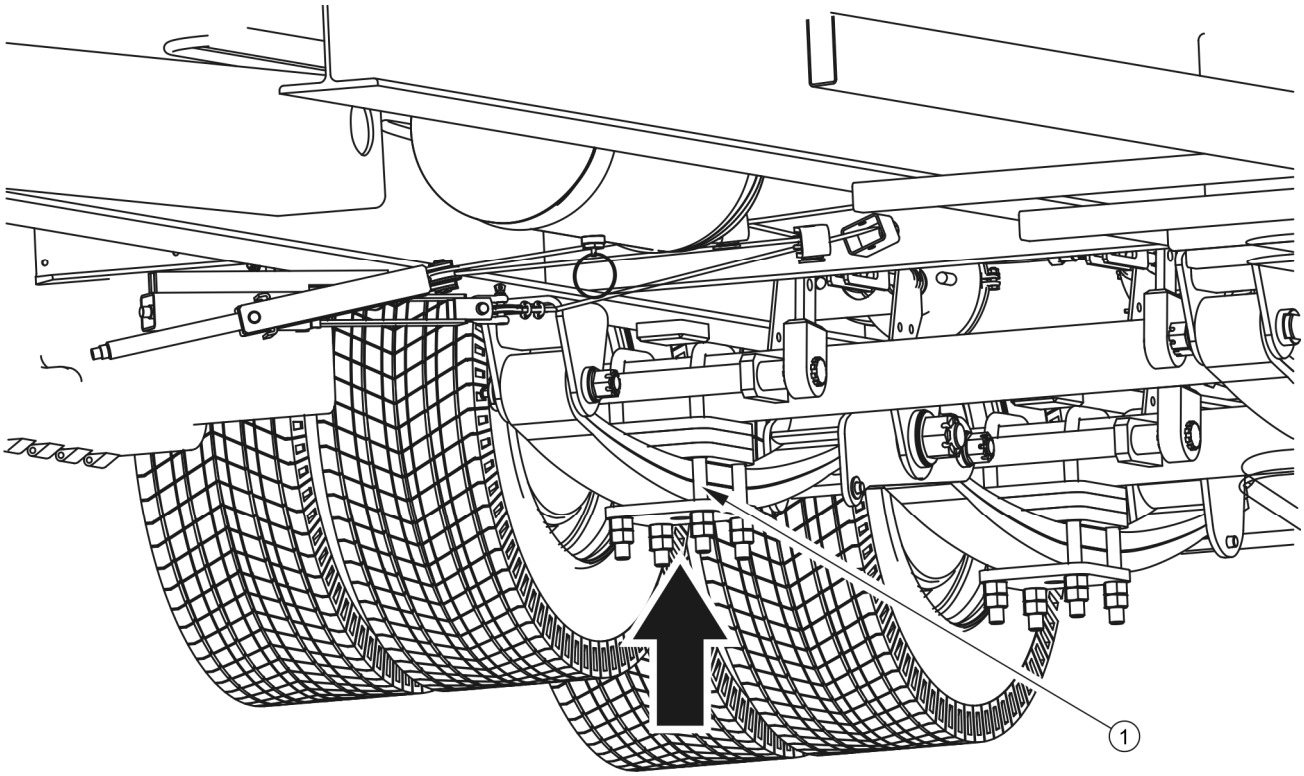


**FIG. 5.1 Lifting jack support point**

*(1) U bolt*

**PREPARATION PROCEDURES**

- ➡ Hitch trailer to tractor, braking tractor with parking brake.
- ➡ Park tractor and trailer on hard level ground.
- ➡ Place securing chocks under one trailer wheel. Ensure that trailer shall not move during inspection.
- ➡ Raise front wheel (opposite to the side where chocks are placed).
    - ⇨ The lifting jack should be placed under the axle between U bolts (1) Figure (*5.1*) securing axle to shock absorber leaf springs, or as near as possible to axle mounting. Recommended fulcrum is marked with an arrow. Lifting jack must be suited to weight of trailer.

**CHECK WHEEL AXLE BEARINGS LOOSENESS**

- Turning the wheel slowly in both directions check that movement is smooth and that the wheel rotates without excessive resistance.
- Turn the wheel so that it rotates very quickly, check that the bearing does not make any unusual sounds.
- Turning the wheel try to detect looseness.
  - ⇨ You may use a lever placed under the wheel supporting the other end on the floor.
- Repeat procedure to each wheel individually, remembering that the jack must be on the side opposite to the chocks.

If slack is felt, adjust bearing. Unusual sounds coming from bearing may be symptoms of excess wear, dirt or damage. In such an event the bearing, together with sealing ring, should be replaced with new parts, or cleaned and greased again During inspection of bearings ensure that possibly detected looseness comes from the bearing and not from the suspension system

**TIP**

**Damaged hub cover or lack of hub cover causes penetration of contamination and dampness to hub, which causes significantly faster wear of bearing and hub seals.**

**Bearing life is dependent on working conditions of trailer, loading, speed of travel and lubrication conditions.**

Check condition of hub cover, if necessary replace with new cover. Inspection of bearing slackness may only be conducted when the trailer is hitched to tractor and the load platform is empty.

**Check wheel axle bearings for slackness:**

- **after passing the first 1,000 km,**
- **after intensive use of trailer,**
- **every six months use or every 25 000 km.**

## DANGER

**Before commencing work the user must read the instructions for lifting and adhere to the manufacturer's instructions.**

**The lifting jack must be stably supported by the ground and so must the axle.**

**Ensure that trailer shall not move during inspection of bearing looseness of axles.**

## 5.2.4 ADJUSTMENT OF WHEEL AXLE BEARINGS LOOSENESS

### PREPARATION PROCEDURES

➡ Prepare tractor and trailer for adjustment procedures according with description provided in section 5.2.3.

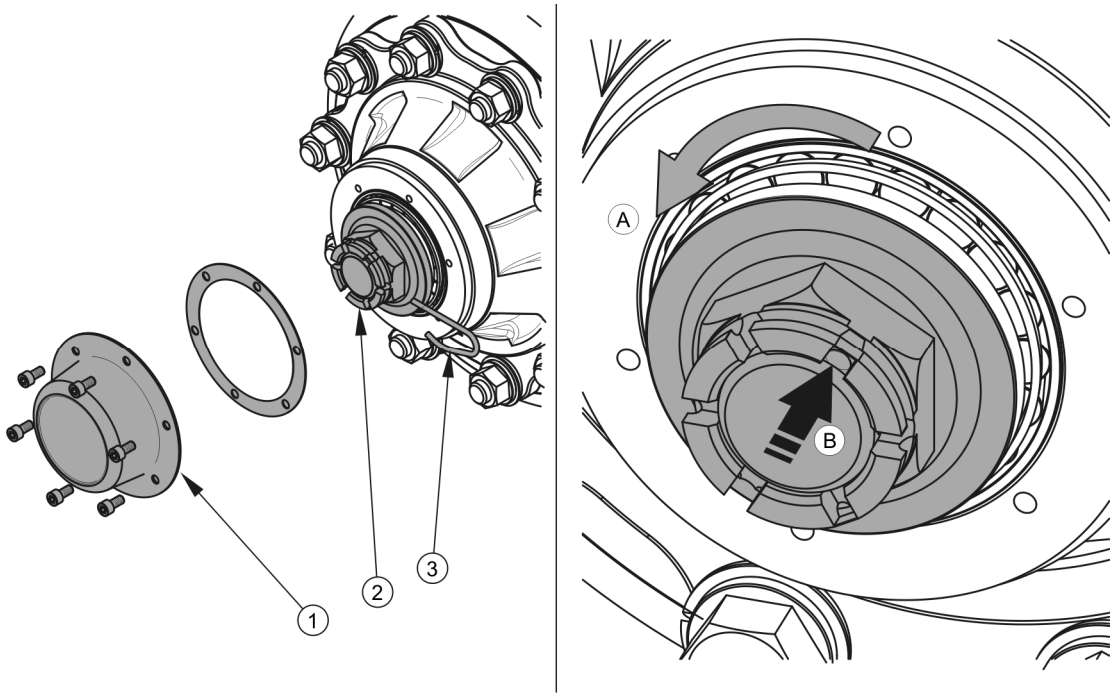


**FIG. 5.2 Adjustment of road wheel axle bearings**

*(1) hub cover, (2) castellated nut, (3) securing split cotter pin*

### ADJUSTMENT OF ROAD WHEEL AXLE BEARINGS

➡ Take off hub cover (1) - figure *(5.2)*.

➡ Take out split cotter pin (3) securing castellated nut (2).

➡ Tighten castellated nut in order to eliminate looseness.

⇨ Hub should rotate with slight resistance.

➡ Unscrew nut in (A) direction, (not less than 1/3 rotation) to cover the nearest thread groove with alignment to opening in wheel stub axle (B). Hub should rotate without excessive resistance

⇨ Nut may not be excessively tightened. Do not apply excessive pressure with regard for deterioration of bearing working conditions.

➡ Secure castellated nut with cotter pin and mount hub cap.

➡ Delicately tap hub cap with rubber or wooden hammer.

The wheel should turn smoothly without stiffness or detectable resistance not originating from abrasion of brake shoes in brake drum. Adjustment of bearing slackness may only be conducted when the trailer is hitched to tractor and it is not loaded.

**TIP**

**If the wheels are dismounted, bearing slackness is easy to check and adjust.**

## 5.2.5 MOUNTING AND DISMOUNTING WHEELS, INSPECTION OF WHEEL NUT TIGHTENING.

### WHEEL DISMOUNTING

➡ Immobilise trailer with parking brake.

➡ Place securing chocks under trailer wheel (opposite of the wheels being dismounted).

➡ Ensure that trailer is properly secured and will not move during wheel dismounting.

➡ Loosen wheel nuts (4).

⇨ Sequence of nut tightening and loosening is shown in Figure (*5.4*).

➡ Place lifting jack and lift trailer.

➡ Undo and remove nuts, remove washers (2).

➡ Dismount external wheel (1).

➡ Dismount spacer rings (6).

➡ Dismount internal wheel (2).

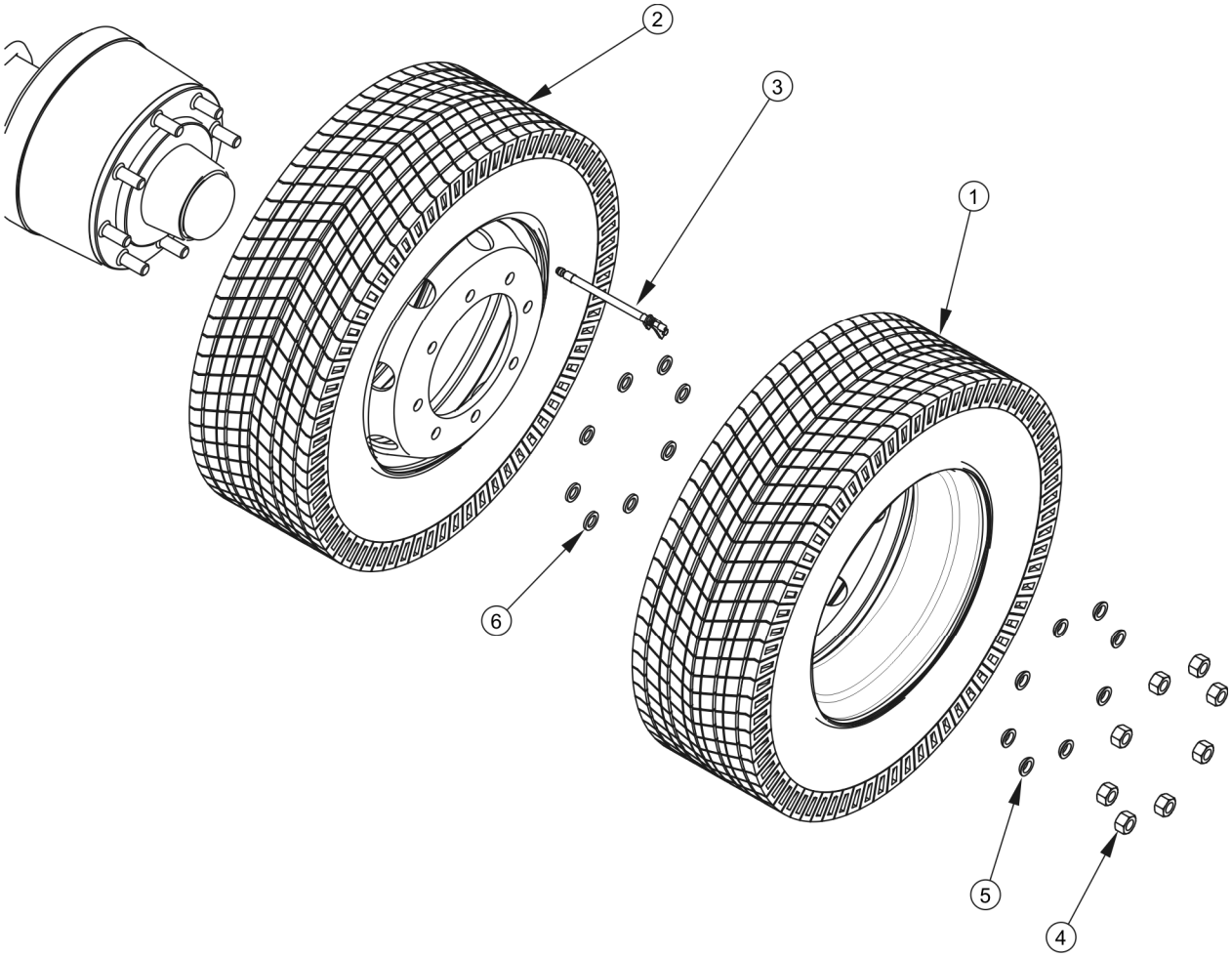


**FIG. 5.3 Components for mounting twin wheels**

*(1) external wheel, (2) internal wheel, (3) tyre valve extension, (4) nut , (5) washer, (6) spacer ring*

**WHEEL MOUNTING**

➡ Clean axle pins and nuts of dirt contamination.

⇨ Do not grease thread of nuts and pins.

➡ Check condition of pins and nuts, if necessary replace.

➡ Mount internal wheel on hub. Check condition of tyre valve extension.

➡ Mount spacer rings on pins.

- Mount external wheel, insert tyre valve extension into opening in external wheel rim.
- Install washers and nuts. Tighten nuts so that internal wheel rim adjoins hub exactly.
- Lower trailer, tighten nuts according to recommended torque and given sequence.

**TIP**

**Wheel nuts should be tightened using a torque of 380 Nm - nuts M20x1.5.**

**TIGHTENING NUTS**

Nuts should be tightened gradually diagonally, (in several stages, until obtaining the required tightening torque) using a torque spanner. If a torque spanner is not available, one may use an ordinary spanner. The arm of the spanner (L) Figure (*5.4*) should be selected according to the weight of the person (F) tightening the nut. Remember that this method of tightening is not as accurate as the use of a torque spanner.

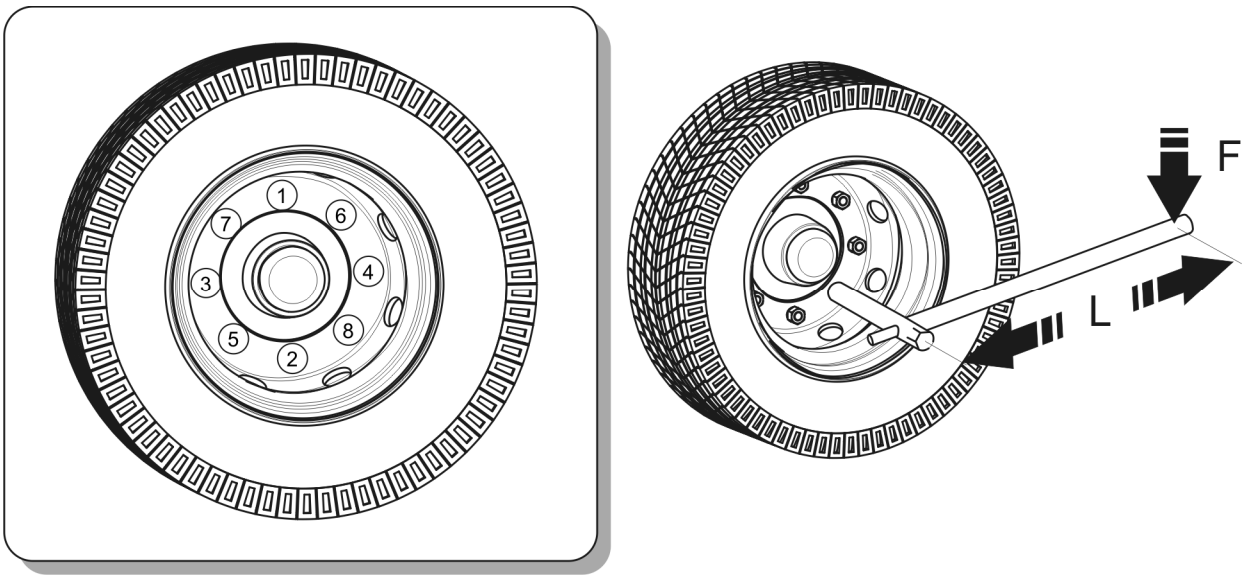


**FIG. 5.4 Sequence of nut tightening**

*(1) - (8) sequence of nut tightening, (L) spanner length, (F) user weight*

**Checking wheel axle tightening:**

- **after first use,**
- **after first travel with load,**
- **after passing the first 1,000 km,**
- **25,000 km.**

**In the event of intensive work checking the nut tightening should be done at least every 100 km. The above actions should be repeated individually if a wheel has been removed from the wheel axle.**

**TAB. 5.1 Spanner arm**

| WHEEL TIGHTENING TORQUE | BODY WEIGHT (F) | ARM LENGTH (L) |
|---|---|---|
| [Nm] | [kg] | [m] |
| 380 | 86 | 0.45 |
| | 77 | 0.50 |
| | 70 | 0.55 |
| | 65 | 0.60 |

## IMPORTANT!

**Axle nuts may not be tightened with impact wrench, because of danger of exceeding permissible tightening torque, the consequence of which may be breaking the thread connection or breaking off the hub pins.**

**The greatest precision is achieved by use of a torque spanner. Before commencing work, ensure that correct tightening torque value is set.**

### 5.2.6 CHECK AIR PRESSURE, EVALUATE TECHNICAL CONDITION OF WHEELS AND TYRES,

Tyre pressure should be checked each time after changing spare wheel and not less than every month. In the event of intensive use it is recommended to check air pressure more frequently. During this time trailer must be unloaded. Checking should be done before travelling when tyres are not heated, or after an extended period of parking.

**TIP**

**Tyre pressure values are specified in information decal, placed on wheel or on upper frame above trailer wheel.**

**DANGER**

**Damaged tyres or wheels may be the cause of a serious accident.**

While checking pressure pay attention to technical condition of wheels and tyres. Look carefully at tyre sides and check the condition of tread.

In case of mechanical damage consult the nearest tyre service and check whether the tyre defect requires tyre replacement.

**TIP**

**Tyre valve extension facilitates checking air pressure in internal wheel tyre.**

Wheels should be inspected with regard to distortion, breaking of material, breaking of welds, corrosion, especially in the area of welds and contact with tyre.

Technical condition and appropriate maintenance significantly extends the life of these components and ensures appropriate level of safety to trailer users.

**Checking tyre pressure and steel rims:**

- **every 1 month of use,**
- **every week during intensive work,**
- **if needed.**

### 5.2.7 ADJUSTMENT OF MECHANICAL BRAKES

During use of trailer abrasive friction covering of brake drums is subject to wear. Piston stroke extends, and exceeding braking force limiting value declines.

Adjustment must be made when:

- piston stroke amounts to 2/3 of maximum stroke,
- expansion levers are not set in parallel to each other during braking,
- repairs are made to braking system.

Trailer wheels must brake simultaneously. Brakes adjustment involves changing the position of the expander arm (1), Figure *(5.5),* in relation to expander shaft (2).

**REQUIRED SERVICE ACTIONS**

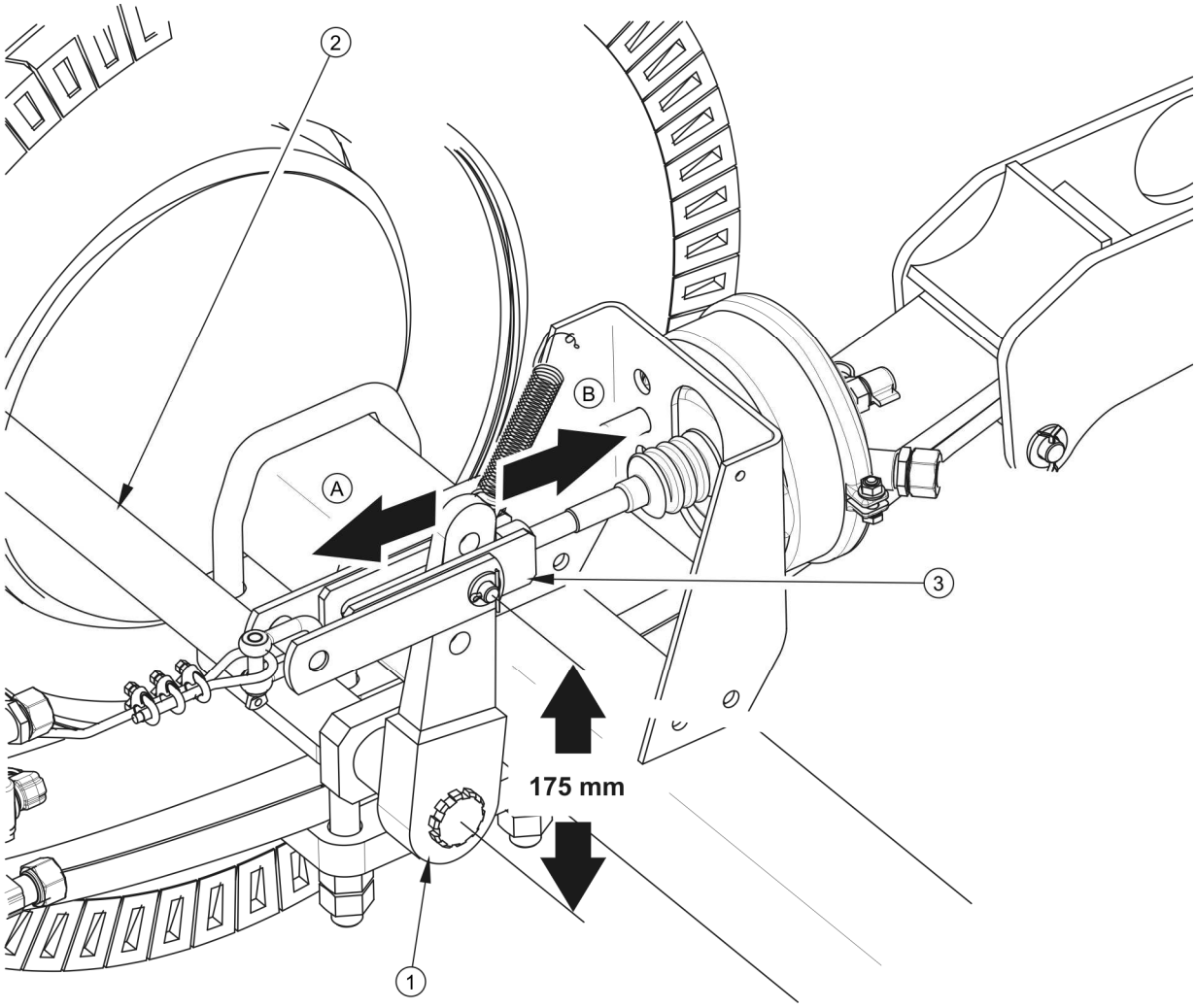


**FIG. 5.5 Adjustment of axle mechanical brakes**

*(1) expander arm, (2) expander shaft, (3) cylinder fork*

➡ Dismount cylinder fork mounted on expander arm (1).

- ➡ Mark position of expander arm (1) with regard to the shaft (2).
- ➡ Dismantle arm and set it in the appropriate position.
  - ⇨ in direction (A), if braking is too early,
  - ⇨ in direction (B), if breaking is too late.
- ➡ Repeat the process for the second arm.
- ➡ Replace the pin fixing the cylinder fork.

Adjustment should be conducted separately for each wheel. Expander arm (1) should be moved by one notch in chosen direction. If the extent of cylinder action is still incorrect, move the lever again. After proper brake adjustment, at full braking the axle shaft expander should create an angle of 90° with the cylinder piston, and the stroke should amount to approximately half the length of the total stroke of the piston. After brake release expander arms may not be supported on any structural elements, because too little withdrawal of a piston ram may cause abrasion of brake shoes in drum and result in overheating trailer brakes. Expander arms must be positioned in parallel with regard to each other at full braking. If this is not so, adjust the position of the lever, which has the longer stroke.

The cylinder fork mounting position is selected by the Manufacturer and may not be changed. For all the braking systems on this trailer it should be 175 mm, see Figure *(5.5)*.

**Checking and adjustment of main brake:**

- **every 12 months,**
- **if needed.**

Brake repairs, changes of brake linings etc. may be only undertaken in authorised service points. Making unauthorised repairs and modifications by the user voids the guarantee. Among the service operations which may be performed by the trailer user there is only brake adjustment by changing the setting of expander arms.

### 5.2.8 CHANGE OF PARKING BRAKE CABLE AND ADJUSTMENT OF CABLE TENSION.

Proper operation of the parking brake is dependent on the effectiveness of the axle brake and the correct brake cable tension.

## REPLACING THE PARKING BRAKE CABLE

- Hitch trailer to tractor. Park trailer and tractor on level surface.
- Place securing chocks under trailer wheel.
- Loosen nuts (5) of cable clamps.
- Dismantle cable (3).
- Lubricate parking brake mechanism (1) and pins of cable guide rollers (4).
- Install new cable, adjust cable tension.

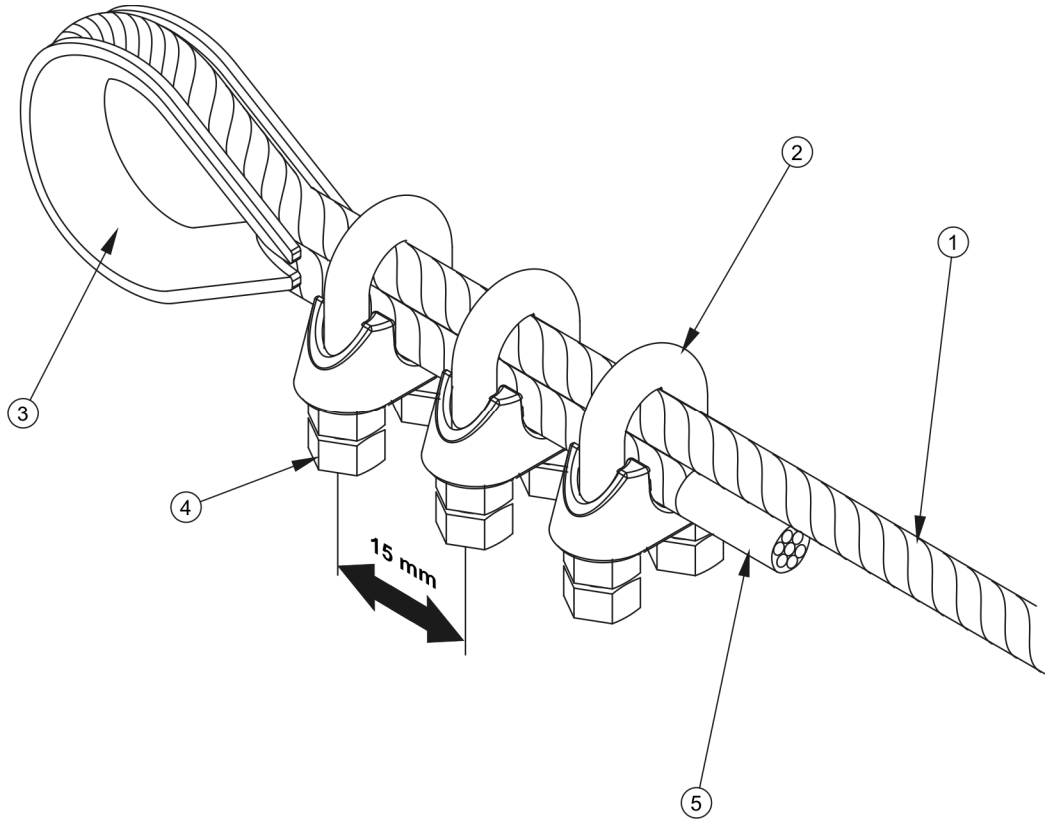


**FIG. 5.6 Installation of steel cable**

*(1) steel cable, (2) clamp jaw, (3) thimble, (4) nut, (5) heat shrink tubing*

## INSTALLATION OF STEEL CABLE

- Secure cable ends by means of heat shrink tubing (5).
- Mount thimble (3).
- Mount the first clamp jaw as close as possible to thimble and tighten nuts (4).
- Mount other clamp jaws and also tighten nuts.

⇨ The distance between the clamps should be at least 15 mm.

**IMPORTANT!**

**Clamp jaws must be placed at the load bearing cable side - see Figure *(5.6).***

**ADJUSTMENT OF PARKING BRAKE CABLE TENSION**

- ➡ Hitch trailer to tractor. Park trailer and tractor on level surface.
- ➡ Place securing chocks under trailer wheel.
- ➡ Unscrew the brake mechanism bolt maximally (1) – Figure *(5.7)*, (anti clockwise).
- ➡ Loosen nuts of handbrake cable clamps located near expander lever
- ➡ Tighten cable and tighten clamps.
  - ⇨ Length of parking brake cable should be so selected that at total release of working and parking brake the cable would be loose and hanging by 1 - 2 cm.

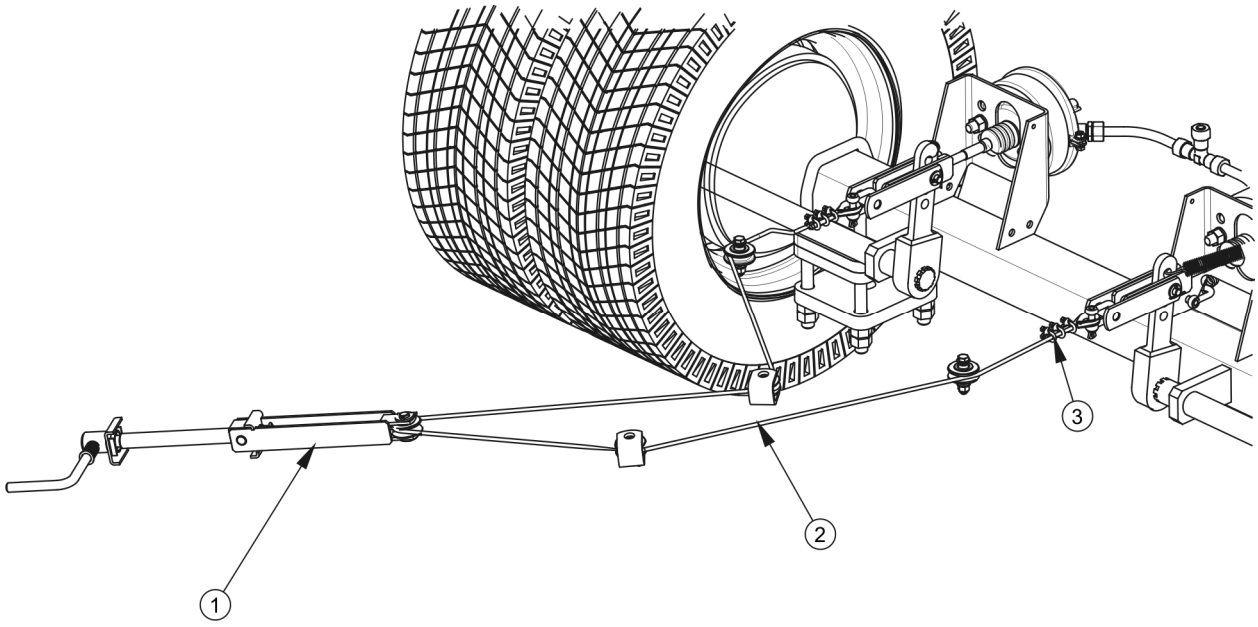


**FIG. 5.7 Adjustment of parking brake cable tension**

*(1) brake crank mechanism, (2) hand brake cable, (3) U-shaped clamp*

Adjustment of parking brake cable tension should be conducted in the event of:

- stretching of cable,
- loosening of parking brake cable clamps
- after adjustment of axle brakes,
- after repairs to axle brake system,
- after repairs in parking brake system.

Before commencing adjustment make certain that the main break is correctly regulated and is functioning properly.

**Checking and parking brake adjustment:**

- **every 12 months,**
- **if needed.**

# 5.3 PNEUMATIC SYSTEM MAINTENANCE

## 5.3.1 PRELIMINARY INFORMATION

Work connected with the repair, change or regeneration of system components (brake cylinders, conduits, control valve, braking force regulator etc.) should be entrusted to specialist establishments, having the appropriate technology and qualifications for this type of work.

**DANGER**

**Do NOT use the trailer when brake system is unreliable.**

The duties of the operator connected with the pneumatic system include:

- inspecting and checking air tightness of system.
- cleaning the air filter (filters),
- draining water from air tank,
- cleaning drain valve,

- cleaning and maintaining pneumatic line connections,

## 5.3.2 INSPECTING AND CHECKING AIR TIGHTNESS OF PNEUMATIC SYSTEM.

### CHECKING HYDRAULIC SYSTEM TIGHTNESS

- ➡ Hitch trailer to tractor.
- ➡ Immobilise tractor and trailer with parking brake. Place chocks under trailer rear wheel.
- ➡ Start tractor in order to supplement air in trailer brake system tank.
  - ⇨ In double line systems air pressure should amount to approx. 8 bar.
- ➡ Turn off tractor ignition.
- ➡ Check system components by releasing brake pedal in tractor.
  - ⇨ Give particular attention to line connections and brake cylinders.
- ➡ Repeat system check with depressed tractor brake pedal.
  - ⇨ The help of a second person is required.

In the event of the appearance of leaks, compressed air will reach places of damage on the exterior, with a characteristic hiss. Lack of system tightness may be exposed by covering checked elements with washing fluid or other foaming preparations, which will not react aggressively with system components. It is recommended to supply preparations commercially available designed to facilitate discovering air leaks. Damaged components should be replaced or repaired. If leaks appear at connections then tighten the connections. If air continues to escape replace connection component or seal.

**Check system tightness**

- **after passing the first 1,000 km,**
- **each time after making repairs or changing system components,**
- **annually.**

### VISUAL ASSESSMENT OF SYSTEM

During tightness inspection attention should additionally be given to technical condition and degree of cleanness of the system components. Contact of pneumatic line seals etc. with oil,

grease, petrol etc. may cause damage and accelerate the ageing process. Bent conduits, permanently deformed, cut or worn should be replaced.

**Visual assessment of system**

- **Conduct inspection of system at the same time as when checking tightness.**

## IMPORTANT!

**Repair, exchange or regeneration of pneumatic system components may only be performed in a specialised workshop.**

### 5.3.3 CLEANING THE AIR FILTERS

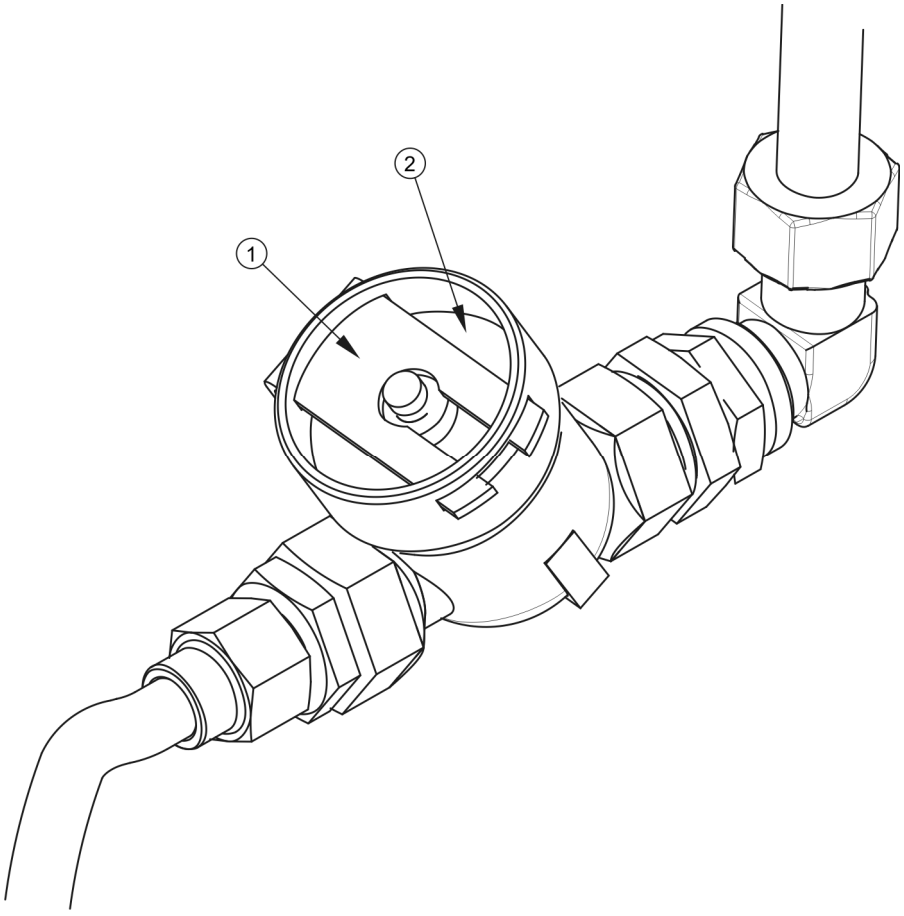


**FIG. 5.8 Air filter**

*(1) securing slide lock, (2) air filter cover*

**DANGER**

**Before proceeding to dismantle filter, reduce pressure in supply line. While disengaging filter slide gate, hold cover with other hand. Stand away from filter cover vertical direction.**

Depending on trailer working conditions, but not less than once in three months, take out and clean air filter inserts, which are located in pneumatic system connection conduits. Inserts are used many times and are not subject to changing unless they are mechanically damaged.

**REQUIRED SERVICE ACTIONS**

- ➡ Reduce pressure in supply line.
  - ⇨ Reduction of pressuring line may be achieved by pressing the head of the pneumatic connection to resistance point.
- ➡ Remove securing slide (1) – figure (*5.8*).
  - ⇨ Hold the filter cover (2) with the other hand. After removing slide lock, the cover is pushed off by the spring, in the filter housing.
- ➡ The insert and the filter body should be carefully washed out and blown through with compressed air. Assembly should be done in reverse order.

**Cleaning the air filter (filters):**

- **every 3 months of use,**

## 5.3.4 DRAINING WATER FROM AIR TANK

**REQUIRED SERVICE ACTIONS**

- ➡ Open out drain valve (2) located in lower part of tank (1) – Figure (*5.9*).
  - ⇨ The compressed air in the tank causes the removal of water to the exterior.
- ➡ After release valve stem should automatically close and stop airflow from tank.
  - ⇨ In the event, that the valve stem resists returning to its setting, then the whole drain valve must be unscrewed and cleaned, or replaced (if it is damaged) - see section 5.3.5.

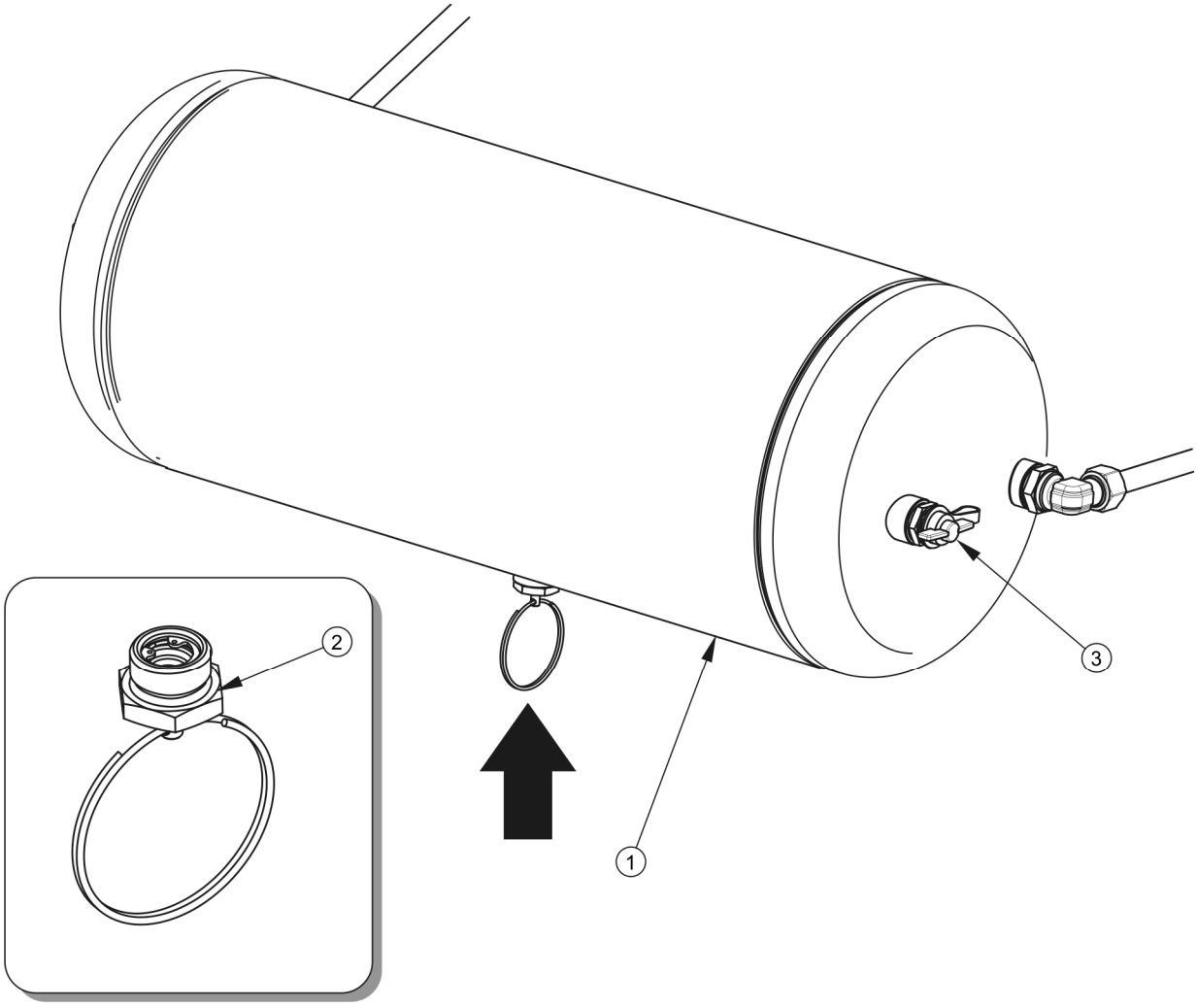


**FIG. 5.9 Draining water from air tank**

*(1) air tank, (2) drain valve, (3) control connector*

**Draining water from air tank:**

- **after each week of use.**

### 5.3.5 CLEANING DRAIN VALVE

## DANGER

**Before dismantling drain valve release air from tank.**

**REQUIRED SERVICE ACTIONS**

- ➡ Reduce pressure in air tank.
  - ⇨ Reduction of pressure in tank is achieved by tilting the drain valve mandrel.
- ➡ Unscrew valve.
- ➡ Clean valve, purge with compressed air.
- ➡ Change copper seal.
- ➡ Screw in valve, fill air tank, and check tank tightness.

**Cleaning valve:**

- **every 12 months (before winter period).**

## 5.3.6 CLEANING AND MAINTAINING PNEUMATIC LINE CONNECTIONS AND PNEUMATIC SOCKETS

**DANGER**

**Unreliable and dirty trailer connections may cause unreliability and faulty functioning of braking system.**

Damaged connection body or connection socket to second trailer should be replaced. In event of damage to cover or seal, change these elements for new reliable elements. Contact of pneumatic connector seals with oils, grease, petrol etc. may cause damage and accelerate ageing process.

If the trailer is unhitched from the tractor, connections should be protected by covers or placed in their designated sockets. Before the winter period it is recommended to preserve the seal with special preparations (e.g. silicon grease for rubber elements).

Each time before connection of the machine inspect technical condition and cleanness of contacts and sockets in tractor. If necessary clean or repair tractor socket.

**Inspect trailer connections:**

- **connection should be inspected every time before connecting trailer to tractor or second trailer.**

### 5.3.7 REPLACEMENT OF THE PNEUMATIC LINE

Pneumatic conduits should be replaced when permanently deformed, cut or frayed.

**REQUIRED SERVICE ACTIONS**

➡ Release all pressure from the system.

⇨ Reduction of pressure can be achieved by complete venting of air tank, i.e. by pressing and holding the drain valve in that position until the tank is completely empty.

➡ Remove the pneumatic line by loosening the nut (2).

➡ Cut off pneumatic line of required length (1).

⇨ Use damaged line as standard for measuring proper length of new line. The ends of the pneumatic line (1) must be cut exactly at right angles.

➡ Install nut (2), clamping ring (3) and reinforcing sleeve (4).

➡ Install pneumatic line and tighten nuts to the appropriate torque.

➡ Check tightness of connection.

**IMPORTANT!**

**The interior of pneumatic line must be clean.**

**Reinforcing sleeve (4) of the line must be thoroughly depressed.**

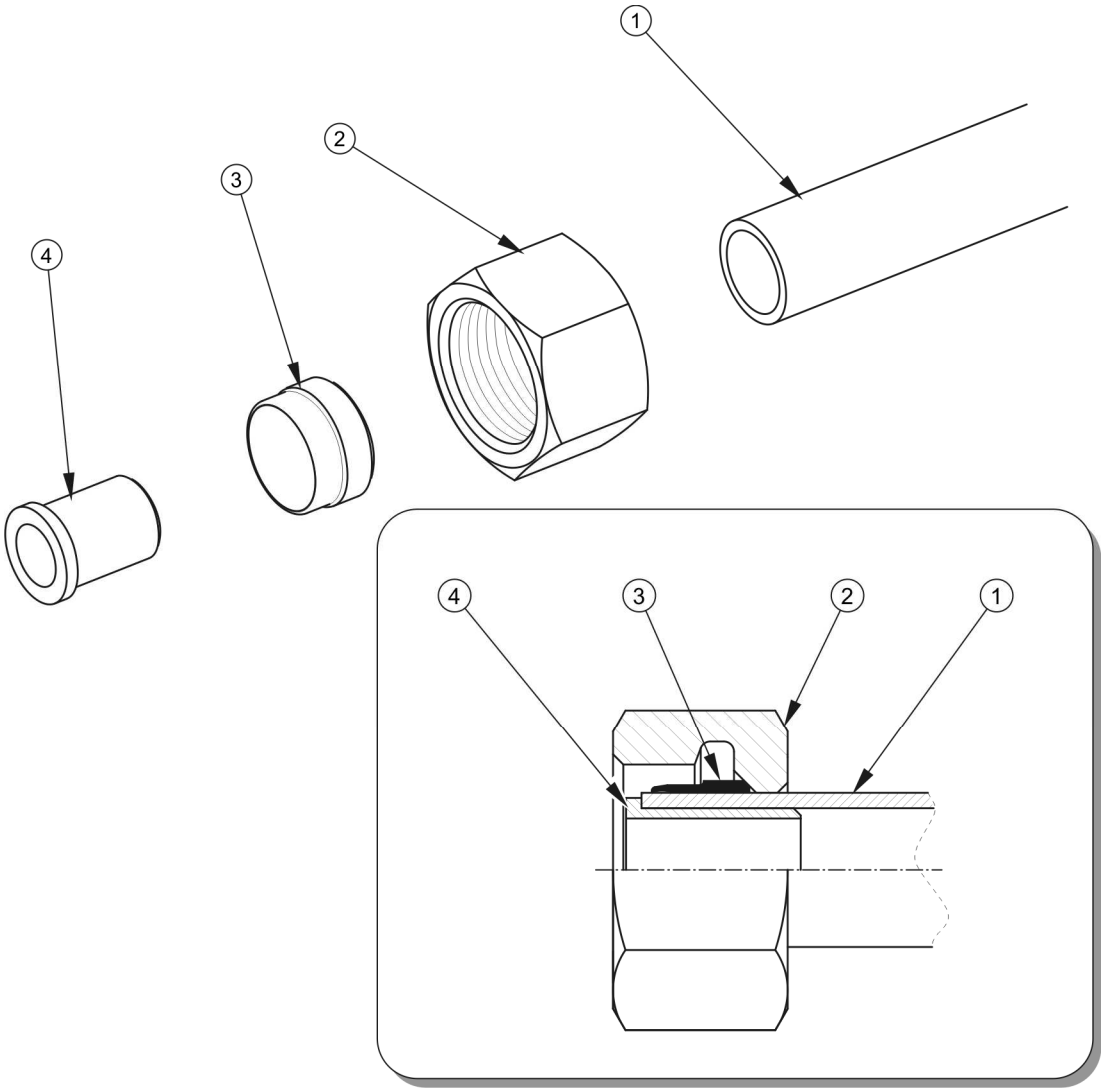


**FIG. 5.10 Design of pneumatic line**

*(1) line, (2) connecting nut (3) clamping ring, (4) reinforcing sleeve*

# 5.4 HYDRAULIC SYSTEM MAINTENANCE

## 5.4.1 PRELIMINARY INFORMATION

Work connected with the repair, change or regeneration of hydraulic system components (cylinders, valves etc.) should be entrusted to specialist establishments, having the appropriate technology and qualifications for this type of work.

The duties of the operator connected with the hydraulic system include:

- inspecting and checking air tightness of system.

- Checking technical condition of hydraulic connections.

**DANGER**

**Do NOT use out of order hydraulic system.**

**Do NOT use the trailer with out of order hydraulic brake system.**

## 5.4.2 CHECKING HYDRAULIC SYSTEM TIGHTNESS

### REQUIRED SERVICE ACTIONS

- ➡ Hitch trailer to tractor.
- ➡ Connect all hydraulic system lines according to service instructions.
- ➡ Clean connectors and ram cylinders.
- ➡ Activate several times ramp hydraulic cylinders and support hydraulic cylinder.
- ➡ Press tractor brake pedal several times
  - ⇨ Only if the trailer is equipped with hydraulic brake system.
- ➡ Check tightness of hydraulic system, inspect cylinders and hydraulic lines.

In the event of confirmation of oil on hydraulic ram cylinder bodies ascertain origin of leak. Inspect hydraulic seals when ram cylinder is completely extended. Minimum leaks are permissible with symptoms of "sweating", however in the event of noticing leaks in the form of "droplets" stop using the trailer until faults are remedied. If unreliability is evident in brake cylinders do NOT use trailer with damaged system until faults are remedied.

**Checking tightness:**

- **After a week of use**
- **every 12 months of use.**

## 5.4.3 CHECKING TECHNICAL CONDITION OF HYDRAULIC CONNECTIONS AND SOCKETS.

Hydraulic connections must be technically reliable and kept clean. Each time before connecting, check if sockets in tractor are maintained in good working condition. Tractor and

trailer hydraulic systems are sensitive to the presence of permanent contamination, which may cause damage to precision system components (contamination may cause scratching of hydraulic valves, abrasion of piston surfaces etc.)

**Inspection of hydraulic connections and sockets:**

- **each time before hitching trailer to tractor.**

### 5.4.4 CHANGE OF HYDRAULIC LINES

Hydraulic lines must be changed every 4 years regardless of their technical condition. This should be entrusted to specialised workshops.

**Change of hydraulic lines:**

- **every 4 years,**

# 5.5 ADJUSTMENT OF DRAWBAR EYE POSITION

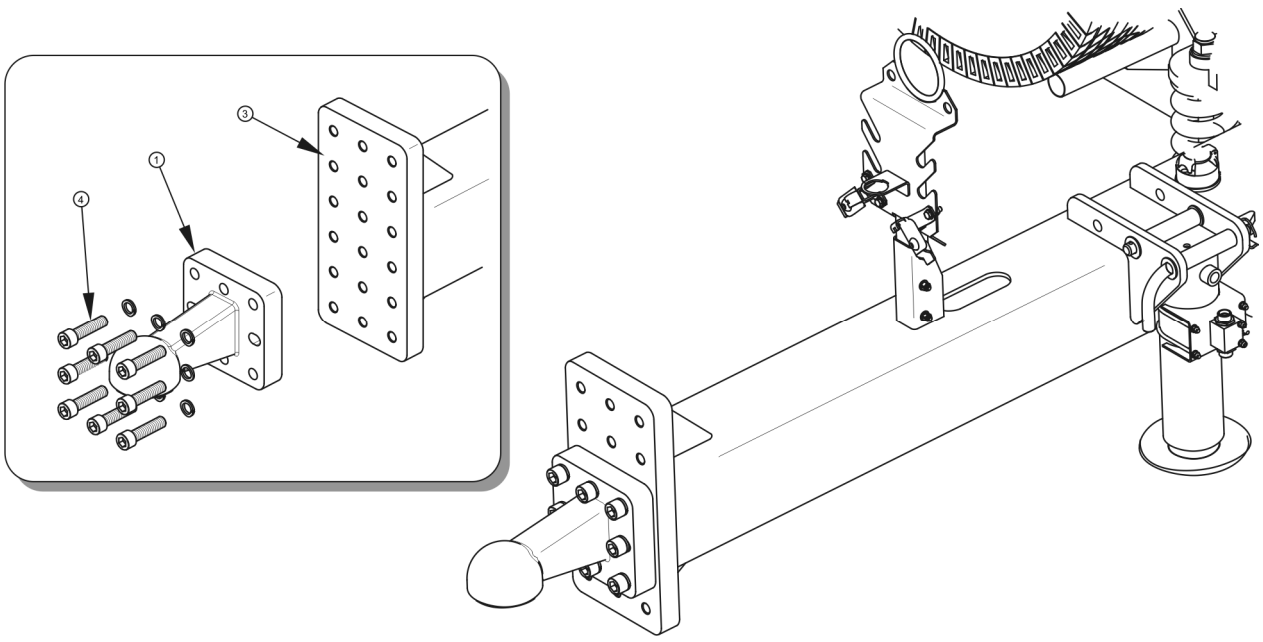


**FIG. 5.11 Adjustment of drawbar position**

*(1) drawbar eye, (2) faceplate, (3) fixing bolt*

Position of trailer drawbar eye depends on the type of agricultural tractor hitch. If possible, we recommend adjusting the tractor hitch so that the platform of the trailer connected to the tractor is positioned parallel to the ground. If the tractor hitch can not be adjusted, adjust position of trailer drawbar eye with regard to the drawbar faceplate (2) – Figure *(5.11).*

**EXTENT OF ACTIVITY**

- ➡ Immobilise trailer with parking brake.
- ➡ Place wheel chocks under trailer wheels.
- ➡ Unscrew drawbar eye (1) and remove from faceplate (2).
- ➡ Set the drawbar eye in its new position and tighten with bolts (3) using appropriate torque.
    - ⇨ The faceplate design (2) allows 4 possible drawbar eye positions, Figure *(5.11)*.
- ➡ Drawbar eye tightness should be checked according to the schedule defined by the Manufacturer.

Drawbar eye tightness should be checked simultaneously with wheel nut tightness checking. Tightening torque should amount to 240 Nm. Nuts should be tightened gradually diagonally, using torque spanner.

Bolts and nuts should be in good technical condition. Corroded parts or those with damaged threads should be replaced.

.

**Checking drawbar eye tightness:**

- **after first use,**
- **after first travel with load,**
- **after 6 months of trailer use.**

**In the event of intensive use, drawbar eye tightness should be checked at least every 100 kilometres.**

# 5.6 OPERATION OF ELECTRICAL SYSTEM AND WARNING ELEMENTS

## 5.6.1 PRELIMINARY INFORMATION

Work connected with the repair, change or regeneration of electrical system components should be entrusted to specialist establishments, having the appropriate technology and qualifications for this type of work.

**IMPORTANT!**

**Do NOT travel with unreliable lighting system. Damaged lamp lenses, and burned-out bulbs must be replaced immediately before travelling. Lost or damaged reflective lights must be replaced.**

The responsibilities of the user are limited to:

- technical inspection of electrical system and reflectors,
- Changing bulbs

**REQUIRED SERVICE ACTIONS**

➡ Hitch trailer to tractor with appropriate connection lead.

⇨ Check if the connection lead is reliable. Check connection sockets in tractor and trailer.

➡ Check completeness and technical condition of trailer lights.

➡ Check completeness of all reflectors.

➡ Check correct mounting of triangular slow-moving vehicle sign.

➡ Before driving on to public road check that the tractor is equipped with warning reflective triangle.

**Checking technical condition of electrical system:**

- **each time while connecting trailer.**

**TIP**

**Before driving away make certain that all lamps and reflective lights are clean.**

### 5.6.2 CHANGE BULBS

Bulb set is presented in table (*5.2*). All light lenses are secured by screws and it is not necessary to dismantle whole lamp or trailer subassemblies.

**TAB. 5.2 List of bulbs**

| LAMP | BULB TYPE | BULB |
|---|---|---|
| Right rear lamp assembly 24-7200-007<br>Left rear lamp assembly 24-7000-007 | 12V/21W BA15S | 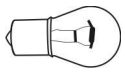 |
| | 12V/21W BAU15s orange | 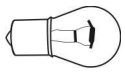 |
| | 12V/21/5W BAY15d | 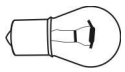 |
| | 12V/5W (SV8.5-8) | |
| Left end clearance lamp 31-3409-05<br>Right end clearance lamp 31-3409-04 | 12V/4W BA9s | 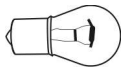 |
| Licence plate illumination light<br>36-3209-01 | 12V/5W (SV8.5-8) | |

# 5.7 TRAILER LUBRICATION

**TAB. 5.3 Trailer lubrication schedule**

| ITEM | LUBRICATION POINT | NUMBER OF LUBRICATION POINTS | TYPE OF GREASE | FREQUENCY |
|---|---|---|---|---|
| **1** | Wheel axle hub bearing | 4 | A | 24M |
| **2** | Expander shaft sleeve in drum casing | 4 | A | 3M |
| **3** | Expander shaft bracket sleeve | 4 | A | 3M |
| **4** | Drawbar hitching eye | 1 | B | 14D |
| **5** | Absorber spring | 4 | C | 6M |
| **6** | Spring sliding surface | 4 | B | 3M |
| **7** | Rocker arm pin | 2 | B | 3M |
| **8** | Leaf spring absorber pin | 4 | B | 3M |
| **9** | Hydraulic cylinder bearing (fixing eye of spring absorbers) (1) | 4 | A | 3M |
| **10** | Parking brake mechanism | 1 | A | 6M |
| **11** | Pin of parking brake cable guide roller | 4 | A | 6M |
| **12** | Drawbar side surface | 2 | B | 1M |
| **13** | Rotary drawbar (1) | 1 | B | 1M |

| ITEM | LUBRICATION POINT | NUMBER OF LUBRICATION POINTS | TYPE OF GREASE | FREQUENCY |
|---|---|---|---|---|
| **14** | Winch rope | 1 | C | 6M |
| **15** | Pin of ramp interlock lever | 2 | A | 6M |
| **16** | Ramp interlock (double ended bolt) | 2 | C | 6M |
| **17** | Pin of plank holder flap | 3 | A | 6M |
| **18** | Drawbar sleeve | 1 | B | 1M |

*(1) - depending on trailer equipment*

*M month, D – day – lubrication periods*

**TAB. 5.4 Recommended lubricants**

| LISTED ON TAB. (5.3) | DESCRIPTION |
|---|---|
| A | machine general-purpose grease (lithium, alkaline), |
| B | permanent grease for heavily loaded elements with addition of $MOS_2$ or graphite |
| C | ordinary machine oil, silicon grease in aerosol |

Trailer lubrication should be performed with the aid of a manually or foot operated grease gun, filled recommended grease. Before commencing work insofar as is possible remove old grease and other contamination. Remove and wipe off excess oil or grease.

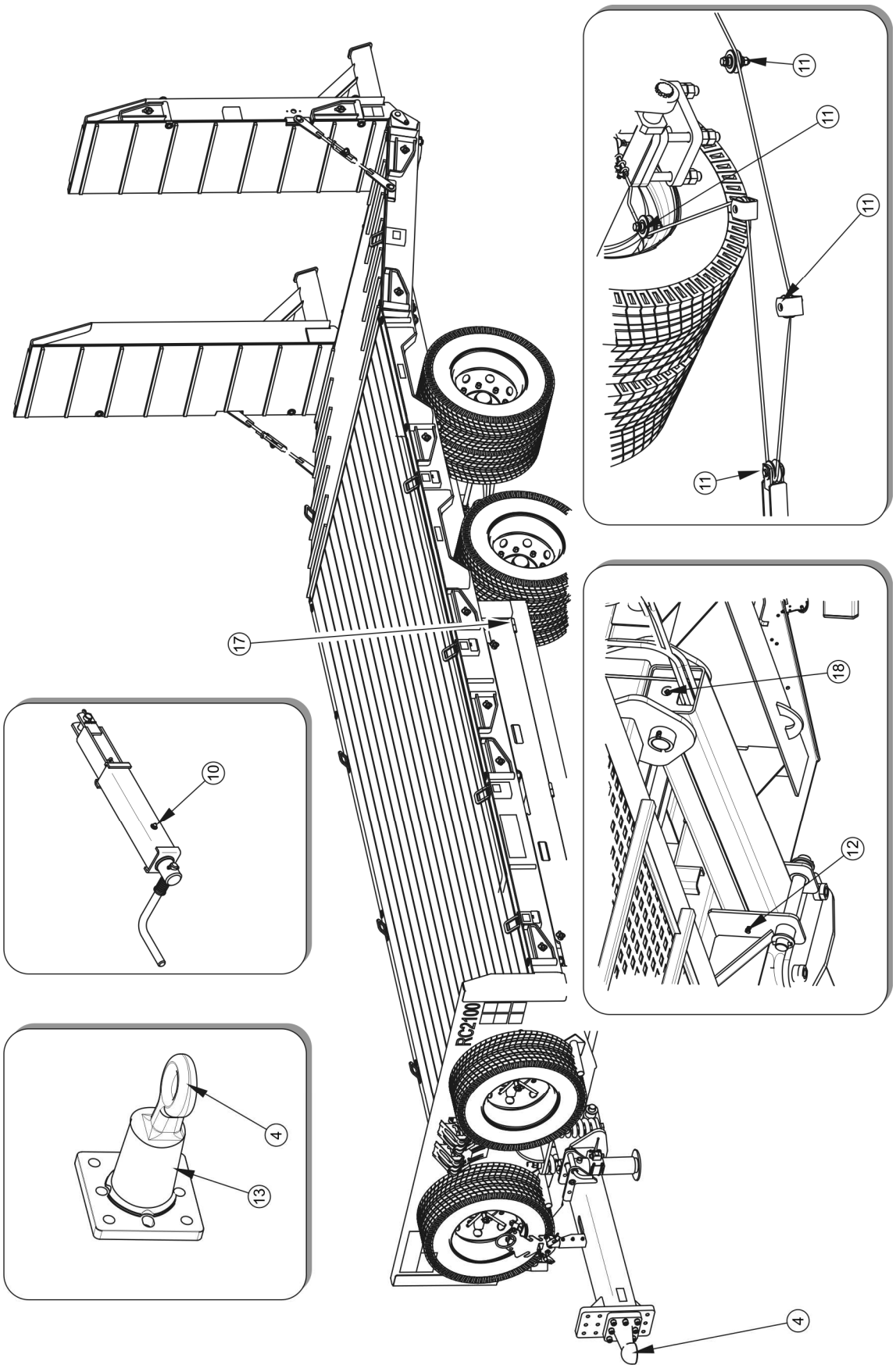


**FIG. 5.12 Lubrication points, part 1**

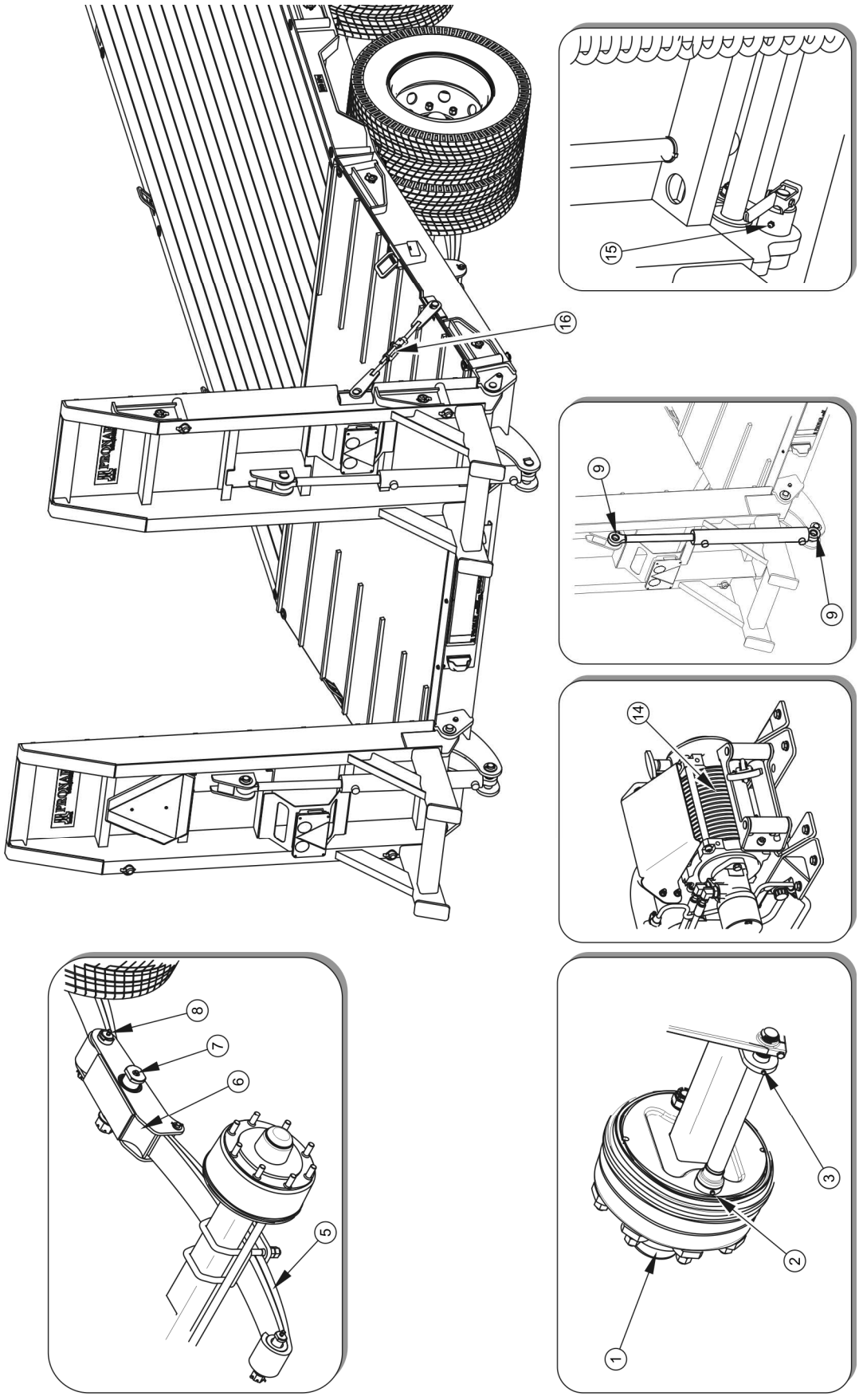


**FIG. 5.13 Lubrication points, part 2**

Parts, which should be lubricated with machine oil, should be wiped with dry cleaning cloth and then a small quantity of oil should be applied do surfaces (with oil can or brush). Wipe off excess oil.

Change of grease in hub bearings should be entrusted to specialised service points, equipped with the appropriate tools. According to the recommendations of the axle Manufacturer, dismantle the entire hub, remove the bearing and individual sealing rings. After careful washing and inspection mount lubricated elements. If necessary, bearing and seals should be replaced with new parts. Lubrication of axle bearings shall be performed at least once in 2 years or every 50 000 km. In the event of intensive use, lubrication should be performed more frequently.

Empty grease or oil containers should be disposed of according to the recommendations of the lubricant Manufacturer.

**During trailer use the user is obliged to observe lubrication instructions according to attached lubrication schedule.**

# 5.8 CONSUMABLES

## 5.8.1 HYDRAULIC OIL

Always adhere to the principle that the oil in the trailer hydraulic system and in the tractor hydraulic system are of the same type. In the event of application of different types of oil make certain that both hydraulic substances may be mixed together. Application of different oil types may cause damage to trailer or tractor. In a new machine, the hydraulic system is filled with L HL32 Lotos hydraulic oil.

In the event of necessity of changing hydraulic oil for another oil, check the recommendations of the oil Manufacturer very carefully. If it is recommended to flush the system with the appropriate preparation, then comply with these recommendations. Attention should be given, so that chemical substances used for this purpose do not damage the materials of the hydraulic system. During normal trailer use change of hydraulic oil is not necessary, but if required, this operation should be entrusted to a specialist service point.

**TAB. 5.5 L-HL 32 Lotos hydraulic oil characteristics**

| ITEM | NAME | UNIT | VALUE |
|---|---|---|---|
| **1** | ISO 3448VG viscosity classification | - | 32 |
| **2** | Kinematic viscosity at 40℃ | $mm^2/s$ | 28.8 – 35.2 |
| **3** | ISO 6743/99 quality classification | - | HL |
| **4** | DIN 51502 quality classification | - | HL |
| **5** | Flash-point | ˚C | 230 |

Because of its composition the oil applied is not classified as a dangerous substance, however long-term action on the skin or eyes may cause irritation. In the event of contact of oil with skin wash the place of contact with water and soap. Do NOT apply organic solvents (petrol, kerosene). Contaminated clothing should be changed to prevent access of oil to skin. In the event of contact of oil with eye, rinse with large quantity of water and in the event of the occurrence of irritation consult a doctor. Hydraulic oil in normal conditions is not harmful to the respiratory tract. A hazard only occurs when oil is strongly atomised (oil vapour), or in the case of fire during which toxic compounds may be released. Oil fires should be quenched with the use of carbon dioxide, foam or extinguisher steam. Do not use water to quench oil fires.

### 5.8.2 LUBRICANTS

For parts under great load it is recommended to apply lithium grease with molybdenum disulphide ($MOS_2$) or graphite additive. In the case of less loaded sub-assemblies the application of general purpose machine greases is recommended, which contain anticorrosion additive and have significant resistance to being washed away by water. Similar characteristics should typify aerosol preparations (Silicon greases and anticorrosive lubricant substances).

Before starting to use greases acquaint oneself with the content off the information leaflet for the chosen product. In particular, the principles of safety and handling of the lubricant and method of disposal (waste containers, contaminated rags, etc.) are essential. Information leaflet (product sheet) should be stored together with the grease.

# 5.9 CLEANING TRAILER

Trailer should be cleaned depending on requirements and before longer idle periods (e.g. before winter period). Wash trailer each time after unloading the material which may cause corrosion of trailer components. Before using pressure washer the user is obliged to acquaint himself with the operating principles and recommendations concerning safe use of this equipment.

**TRAILER CLEANING GUIDELINES**

- Before washing trailer open all sides and extensions. Carefully clean load remains from the load box (sweep out or blow out with compressed air), especially where sides and extensions join and.
- To clean trailer only use clean running water or water with a cleaning detergent additive with neutral pH.
- Using pressure washer increases washing effectiveness, but particular care must be taken during work. During washing washer nozzle may not be closer than 50 cm from the surface being cleaned.
- Water temperature shall not exceed 55℃.
- Do not direct water stream directly at system and equipment elements of trailer i.e. control valve, braking force regulator, brake cylinders, hydraulic cylinders, pneumatic, electric and hydraulic plugs, lights, electrical connections, information and warning decals, identification plates, line connections and trailer lubrication points etc. Great water jet pressure may damage these elements. During washing, try not to wet load platform planks.
- For cleaning and maintenance of plastic coated surfaces it is recommended to use clean water or special preparations designed for this purpose.
- Do not apply organic solvents, preparations of unknown origin or other substances, which may cause damage to lacquered, rubber or plastic surfaces. In the event of doubt it is recommended to make a test on an unseen surface area.

- Surfaces smeared with oil or grease should be cleaned by application of benzene or other degreasing agents and then washed with clean water with added detergent. Comply with recommendations of the Manufacturer.

**DANGER**

**Carefully read the instructions for application of washing detergents and maintenance preparations.**

**While washing with detergents wear appropriate protective clothing and goggles protecting against splashing.**

- Washing detergent should be kept in original containers, optionally in replacement containers, but very clearly marked. Preparations may not be stored in food and drink containers.
- Care for the cleanness of elastic conduits and seals. The plastic from which these elements are made may be susceptible to organic substances and some detergents. As a result of long-term reaction of some substances, the ageing process may be accelerated and risk of damage increased. Rubber elements should be maintained with the aid of special preparations after previous thorough washing.
- After finishing washing wait until trailer is dry and then grease all inspection points according to recommendations. Remove excess oil or grease with a dry cloth.
- Observe environmental protection principles and wash trailer in a place designed for this purpose.
- Washing and drying trailer must take place at temperatures above 0℃.
- After washing and drying, trailer should be greased at all control points regardless of last lubrication period.
- We recommend that wooden floor should be protected and preserved once a year using commercially available preparations.

# 5.10 STORAGE

- Trailer should be kept in closed or roofed building.
- If the machine will not be used for a long time, it is essential to protect it from adverse weather, especially rust and accelerated tyre deterioration. During this time trailer must be unloaded. Trailer should be very carefully washed and dried.
- Corroded places should be cleaned of rust, degreased and protected using undercoat paint and then painted with surface paint according to colour scheme.
- In the event of prolonged work stoppage, it is essential to lubricate all elements regardless of the period of the last lubrication process.
- Wheel rims and tyres should be carefully washed and dried. During longer storage of unused trailer it is recommended that every 2 to 3 weeks the machine may be moved a bit so that the place of contact of tyres with ground is changed. The tyres will not be deformed and maintain proper geometry. Also tyre pressure should be inspected from time to time, and if necessary pressure should be increased to appropriate value.

# 5.11 TIGHTENING TORQUE FOR NUT AND BOLT CONNECTIONS

Unless other tightening parameters are given, during maintenance repair work apply appropriate torque to tightening nut and bolt connections. Recommended tightening torque of most frequently applied nut and bolt connections are given in table below. Given values apply to non-lubricated steel bolts.

**TAB. 5.6 Tightening torque for nut and bolt connections**

| **THREAD METRIC** | **5.8(1)** | **8.8(1)** | **10.9(1)** |
|---|---|---|---|
| | Md [Nm] | | |
| M10 | 37 | 49 | 72 |
| M12 | 64 | 85 | 125 |

| **THREAD METRIC** | **5.8**[1] | **8.8**[1] | **10.9**[1] |
|---|---|---|---|
| | Md [Nm] | | |
| M14 | 100 | 135 | 200 |
| M16 | 160 | 210 | 310 |
| M20 | 300 | 425 | 610 |
| M24 | 530 | 730 | 1,050 |
| M27 | 820 | 1,150 | 1,650 |
| M30 | 1,050 | 1,450 | 2,100 |

*(1) – resistance class according to DIN ISO 898 standard*

**TIP**

Hydraulic lines should be tightened with torque of 50 – 70 Nm.

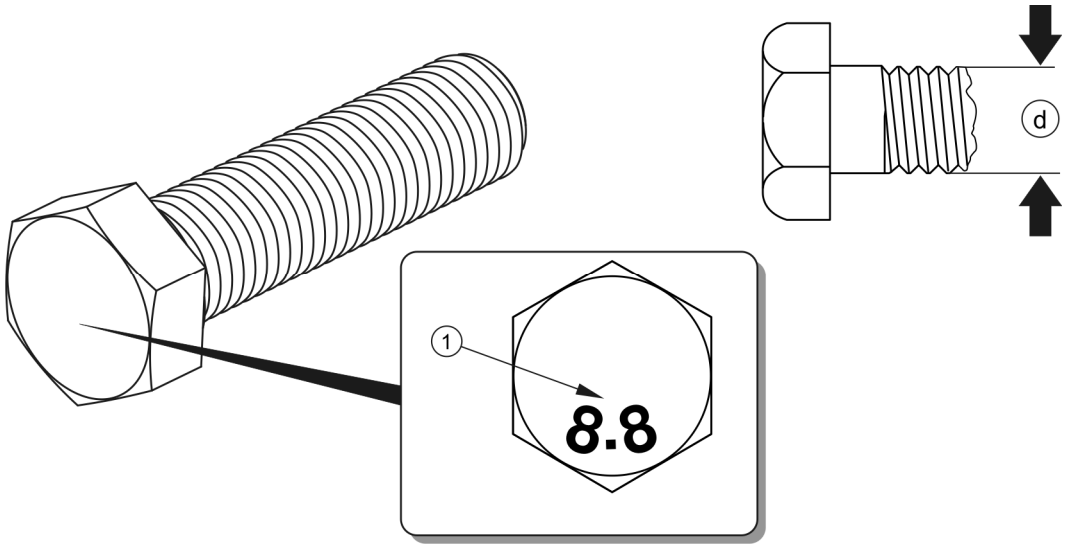


**FIG. 5.14 Bolt with metric thread**

*(1) resistance class, (d) thread diameter*

# 5.12 TROUBLESHOOTING

**TAB. 5.7 Troubleshooting**

| FAULT | CAUSE | REMEDY |
|---|---|---|
| Problem with moving off | Brake system pneumatic conduits not connected | Connect brake conduits (applies to pneumatic systems) |
| | Applied parking brake | Release parking brake. |
| | Damaged pneumatic system connection conduits | Replace. |
| | Leaking connections | Tighten, replace washers or seal set, replace conduits. |
| | Damage control valve or brake force regulator | Check valve, repair or replace. |
| Noise in axle hubs | Excessive slack in bearings | Check slack and regulate if needed |
| | Damaged bearing | Replace bearing |
| | Damaged hub parts | Replace |
| Poor reliability of braking system.<br>Excessive heating of axle hubs | Insufficient pressure in system | Check pressure on tractor pressure gauge, wait till compressor fills tank to required pressure.<br>Damaged air compressor in tractor Repair or replace.<br>Damaged brake valve in tractor. Repair or replace.<br>Leaking system lines or connections. Check system for tightness. |
| | Incorrect main or parking brake adjustment | Regulate setting of expander arms |
| | Worn brake linings | Change brake shoes |
| Incorrect hydraulic system operation | Improper hydraulic oil viscosity | Check oil quality, make sure that the oil in both machines is of the same type. If necessary change |

| FAULT | CAUSE | REMEDY |
|---|---|---|
| | | oil in tractor or in trailer |
| | Insufficient tractor hydraulic pump output, tractor hydraulic pump is damaged. | Check tractor hydraulic pump. |
| | Damaged or contaminated ram cylinder | Check cylinder ram piston (bending, corrosion), check ram cylinder for tightness (piston seal), in case of need repair or replace ram cylinder. |
| | Excessive cylinder ram loading | Check and reduce cylinder loading if necessary |
| | Damaged hydraulic lines | Check and ascertain that hydraulic lines are tight, not fractured and properly tightened. If necessary replace or tighten. |
| | Damaged hydraulic selective control valve | Check if selective control valve operates correctly. Repair or replace it, if necessary. |

# NOTES

# ANNEX A

Tyre dimensions

| LP. | AXLE FRONT / REAR | WHEEL BRAKE |
|---|---|---|
| **1** | **215/75 R17.5 135/133 J** | 17.5x6.75 |